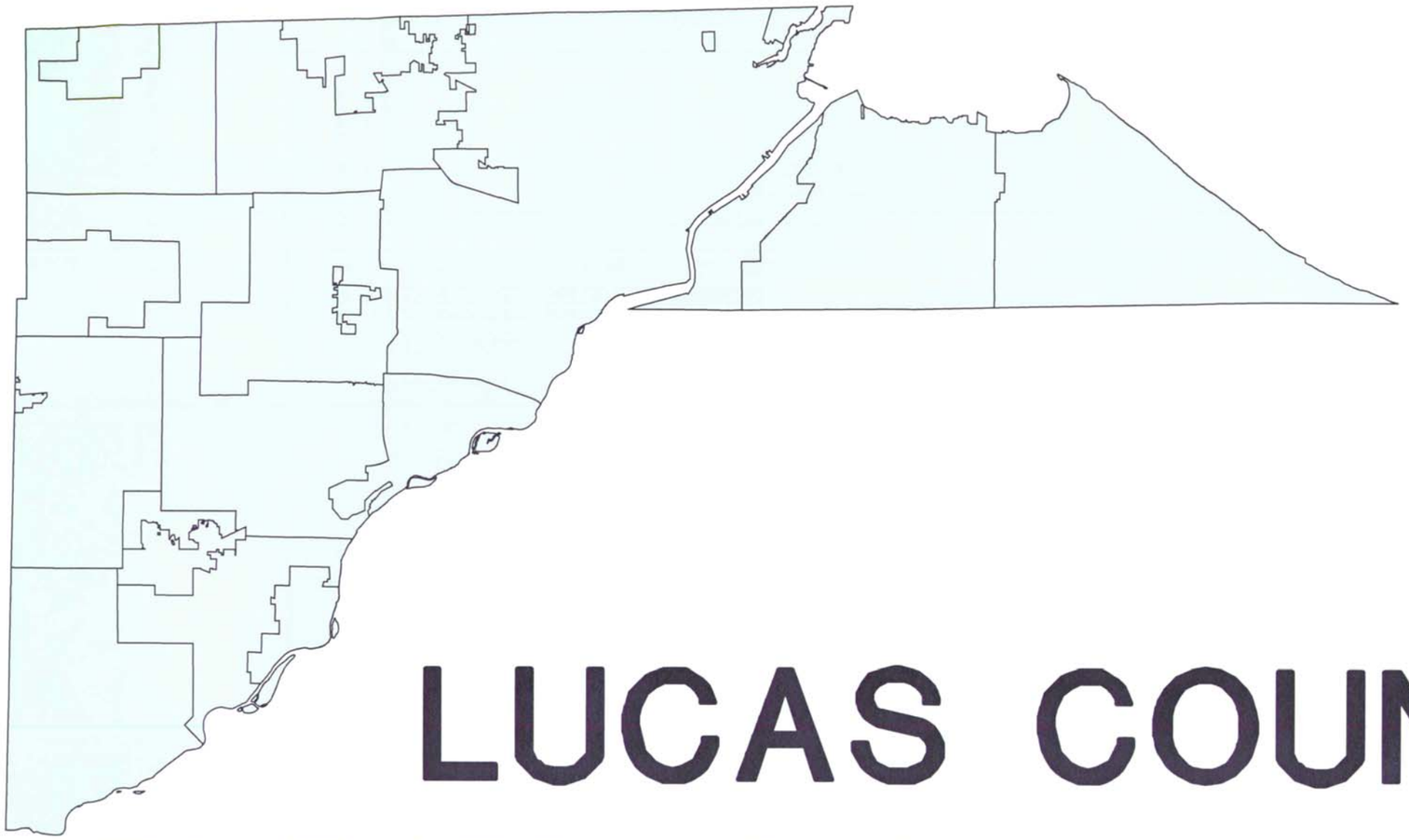

LUCAS COUNTY

STANDARD CONSTRUCTION DRAWINGS

KEITH G. EARLEY, P.E., P.S.
LUCAS COUNTY ENGINEER

OFFICE OF THE LUCAS COUNTY ENGINEER
STANDARD CONSTRUCTION DRAWINGS

DWG. NO.	PAGE	ROADWAY & PAVEMENT	DATE
RP-1	2-3	TYPICAL SECTIONS	04/17/07
RP-2	4	CUL-DE-SAC DETAILS	04/17/07
RP-3	5	CONCRETE CURB & WALK DETAILS	04/17/07
RP-4	6	CURB RAMPS WITH TRUNCATED DOMES	04/17/07
RP-5	7	TURNAROUNDS	03/06
RP-6	8	SPEED HUMP	03/06
RP-7	9	GUARDRAIL BARRICADE	03/06
RP-8	10	MAILBOX SUPPORT (TYPE 1 & 2)	03/06
RP-9	11A-11B	ROADWAY MONUMENTS	03/20/09
		DRAINAGE	
CB-1	12	TYPE A-1 CATCH BASIN	04/17/07
CB-2	13-14	TYPE A-2/A-4 CATCH BASIN	04/17/07
CB-3	15	TYPE A-3 CATCH BASIN	04/17/07
		TRAFFIC	
TR-1	16	ROAD NAME SIGN DETAIL	04/17/07
TR-2	17	ADVANCED ROAD NAME SIGN	04/17/07
TR-3	18	SIGN BLANK DETAIL	03/06
TR-4	19	YIELDING POST	01/19/01
TR-5	20	TYPICAL SIGN LOCATION DETAIL	03/06
TR-6	21	CANTILEVER SIGN SUPPORT 3 - LANE CONTROL	03/06
TR-7	22	CANTILEVER SIGN SUPPORT 4 - LANE CONTROL	03/06
TR-8	23	STRAIN POLE DETAIL	03/06
TR-9	24	POLE & PEDESTAL FOUNDATION DETAILS	03/06
TR-10	25	CABINET FOUNDATION & WORK PAD DETAIL	04/17/07
TR-11	26	PULL BOX WITH NEW OR EXISTING CONDUIT	04/17/07
TR-12	27	GENERATOR POWER PANEL	03/06

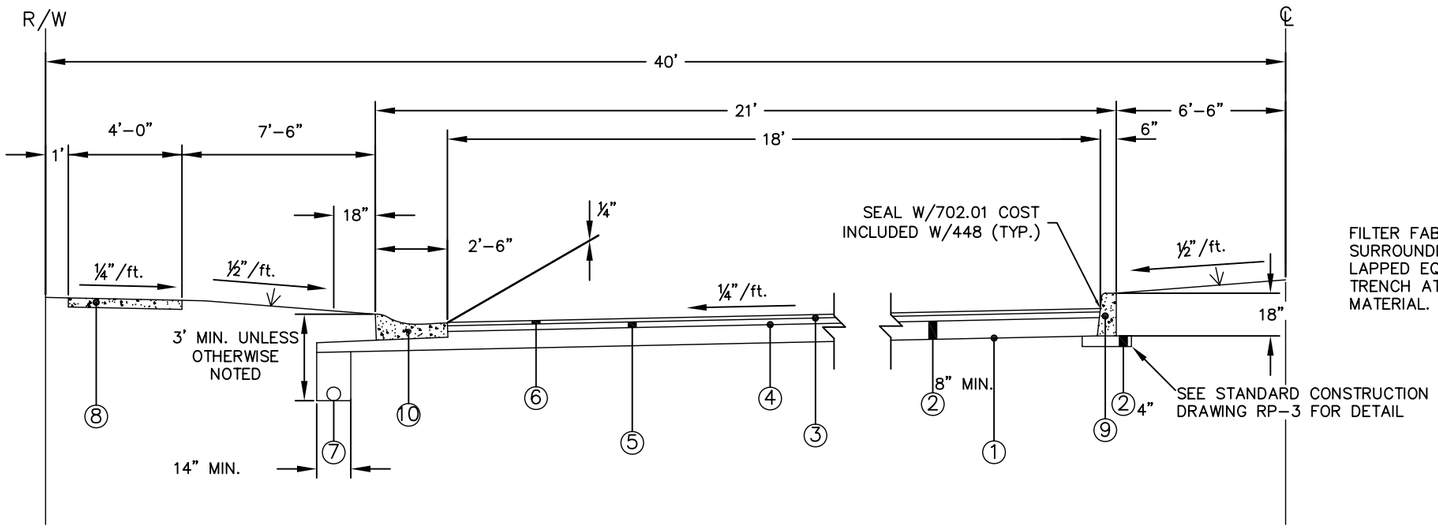

TYPICAL BLVD. HALF SECTION

NEW RESIDENTIAL STREET

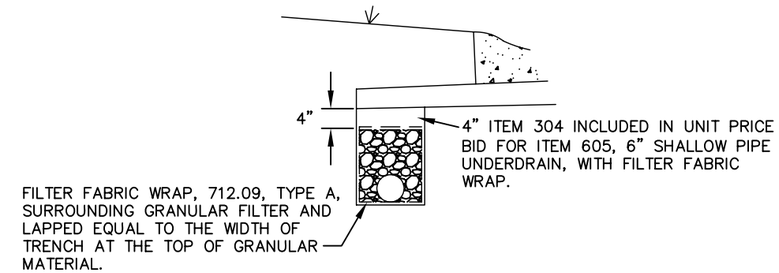

UNDERDRAIN TRENCH DETAIL

LEGEND

1. ITEM 204 SUBGRADE COMPACTION
2. ITEM 304 AGGREGATE BASE
3. ITEM 407 TACK COAT FOR INTERMEDIATE COURSE (@ A RATE OF 0.04 GAL./S.Y.)
4. ITEM 408 PRIME COAT (@ A RATE OF 0.4 GAL./S.Y.)
5. ITEM 448 2½" ASPHALT CONCRETE INTERMEDIATE COURSE, TYPE 2, PG 64-22, AS PER PLAN
6. ITEM 448 1½" ASPHALT CONCRETE SURFACE COURSE, TYPE 1, PG 64-22, AS PER PLAN
7. ITEM 605 6" SHALLOW PIPE UNDERDRAINS, 707.31 OR 707.41 W/ FILTER FABRIC WRAP & 6" TYPE F, 707.33, 707.42 OR 707.45 AT ALL STRUCTURES
8. ITEM 608 4" CONCRETE WALK / 6" CONCRETE WALK AT DRIVEWAYS (SEE STANDARD CONSTRUCTION DRAWING RP-3)
9. ITEM 609 CURB, TYPE A (SEE STANDARD CONSTRUCTION DRAWING RP-3)
10. ITEM 609 CURB, TYPE F (SEE STANDARD CONSTRUCTION DRAWING RP-3)

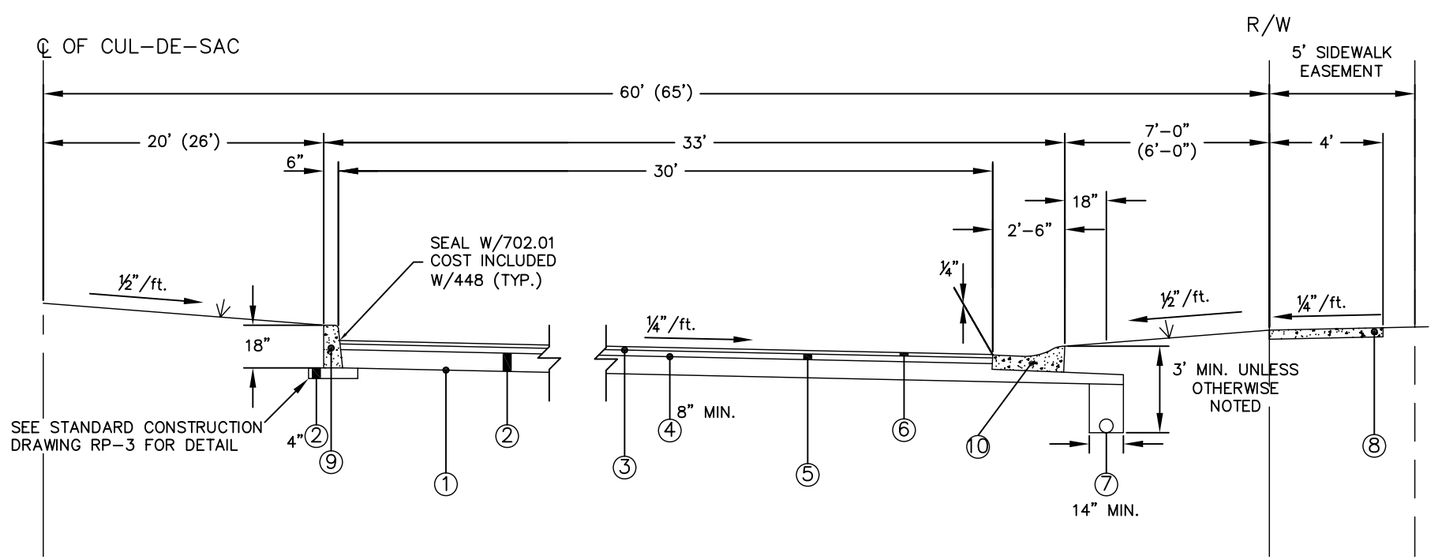

TYPICAL CUL-DE-SAC HALF SECTION

NEW RESIDENTIAL STREET
(SEE STANDARD CONSTRUCTION DRAWING RP-2)

PAVEMENT DESIGN SHOWN IS A MINIMUM AND DESIGN WILL BE SUBJECT TO SITE SPECIFIC SOIL TYPES AND PROPOSED DEVELOPMENT TYPE AND USE.

TYPICAL SECTIONS

LUCAS COUNTY STANDARD CONSTRUCTION DRAWINGS

RP-1

PAVEMENT DESIGN SHOWN IS A MINIMUM AND DESIGN WILL BE SUBJECT TO SITE SPECIFIC SOIL TYPES AND PROPOSED DEVELOPMENT TYPE AND USE.

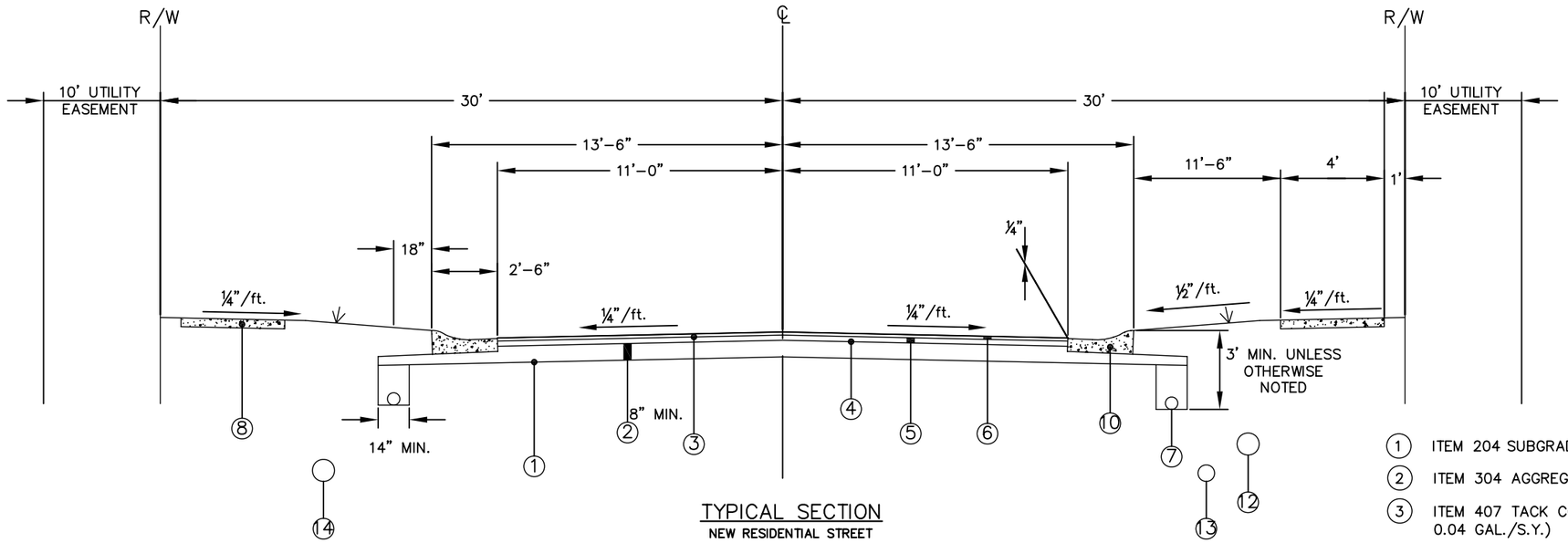

TYPICAL SECTION
NEW RESIDENTIAL STREET

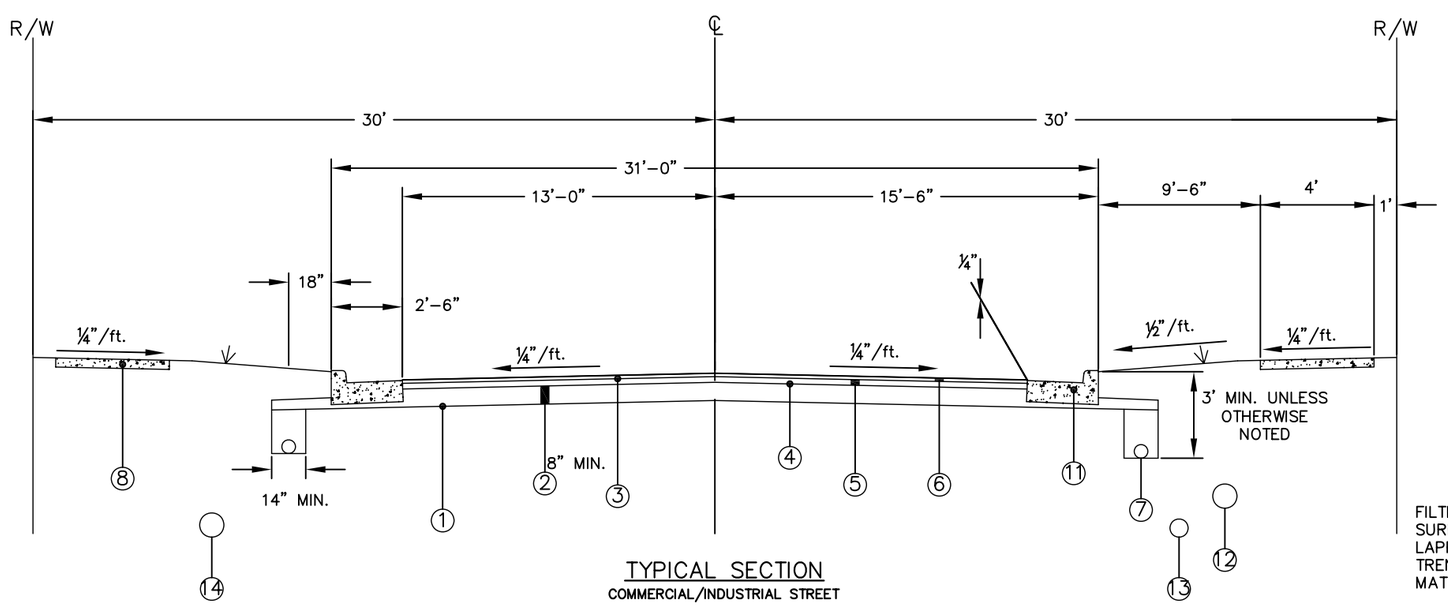

TYPICAL SECTION
COMMERCIAL/INDUSTRIAL STREET

LEGEND

1. ITEM 204 SUBGRADE COMPACTION
2. ITEM 304 AGGREGATE BASE
3. ITEM 407 TACK COAT FOR INTERMEDIATE COURSE (@ A RATE OF 0.04 GAL./S.Y.)
4. ITEM 408 PRIME COAT (@ A RATE OF 0.4 GAL./S.Y.)
5. ITEM 448 2½" ASPHALT CONCRETE INTERMEDIATE COURSE, TYPE 2, PG 64-22, AS PER PLAN
6. ITEM 448 1½" ASPHALT CONCRETE SURFACE COURSE, TYPE 1, PG 64-22, AS PER PLAN
7. ITEM 605 6" SHALLOW PIPE UNDERDRAINS, 707.31 OR 707.41 W/ FILTER FABRIC WRAP & 6" TYPE F, 707.33, 707.42 OR 707.45 AT ALL STRUCTURES
8. ITEM 608 4" CONCRETE WALK / 6" CONCRETE WALK AT DRIVEWAYS (SEE STANDARD CONSTRUCTION DRAWING RP-3)
9. ITEM 609 CURB, TYPE A (SEE STANDARD CONSTRUCTION DRAWING RP-3)
10. ITEM 609 CURB, TYPE F (SEE STANDARD CONSTRUCTION DRAWING RP-3)
11. ITEM 609 COMBINATION CURB AND GUTTER, TYPE 2
12. STORM SEWER (23' RT.)
13. WATER LINE (18'-19' RT.)
14. SANITARY SEWER (22'-23' LT.)

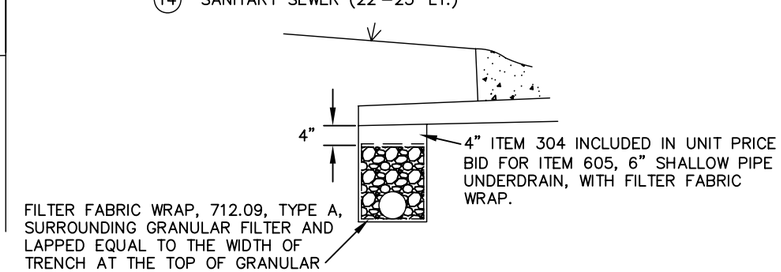

UNDERDRAIN TRENCH DETAIL

TYPICAL SECTIONS

LUCAS COUNTY STANDARD CONSTRUCTION DRAWINGS

RP-1

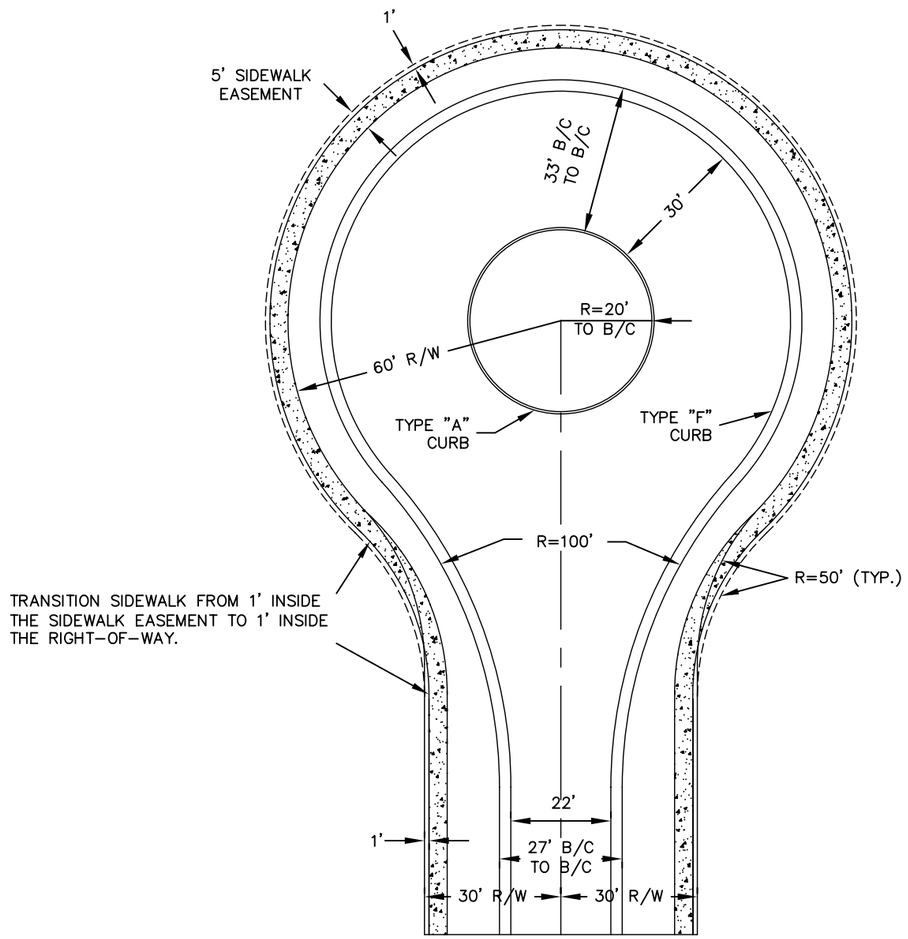

NOTES:

1. FOR RESIDENTIAL DEVELOPMENT. COMMERCIAL AND INDUSTRIAL CUL-DE-SACS WILL BE DESIGNED FOR ANTICIPATED TRUCK USAGE.

2. THIS DETAIL IS APPLICABLE WHEN THE LENGTH OF THE CUL-DE-SAC STREET IS NOT GREATER THAN 700 FEET.

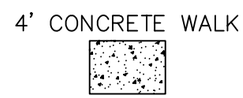

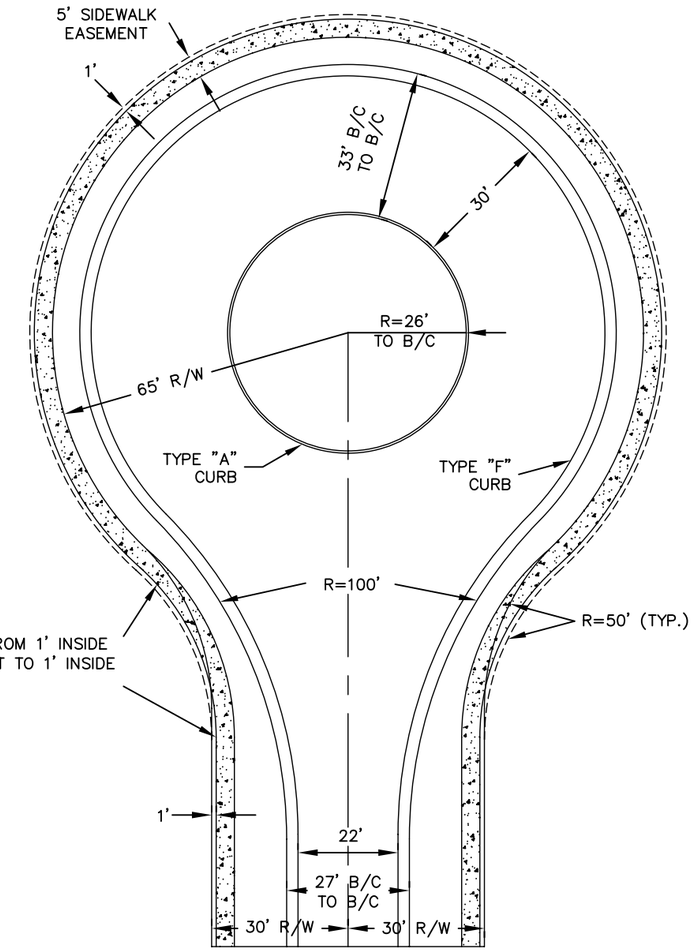

NOTES:

1. FOR RESIDENTIAL DEVELOPMENT. COMMERCIAL AND INDUSTRIAL CUL-DE-SACS WILL BE DESIGNED FOR ANTICIPATED TRUCK USAGE.

2. THIS DETAIL IS APPLICABLE WHEN THE LENGTH OF THE CUL-DE-SAC STREET EXCEEDS 700 FEET.

03/06
04/17/07

CUL-DE-SAC DETAILS

LUCAS COUNTY STANDARD CONSTRUCTION DRAWINGS

RP-2

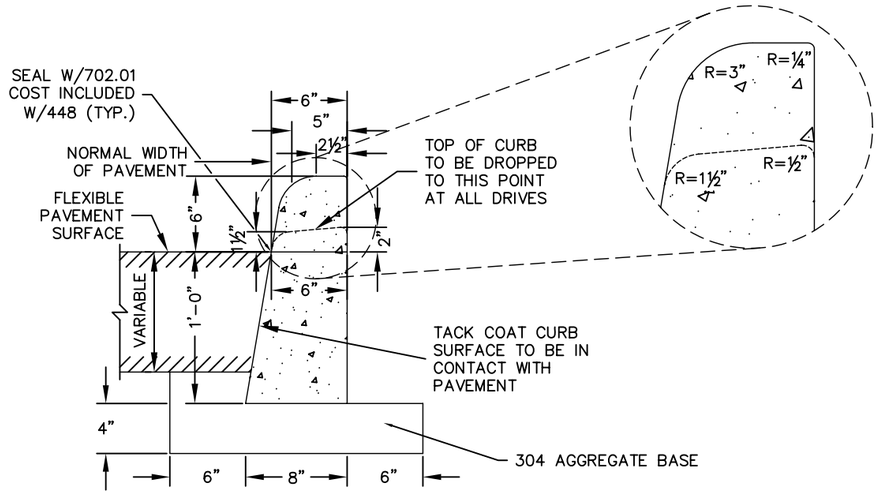

ITEM 609 CURB, TYPE A

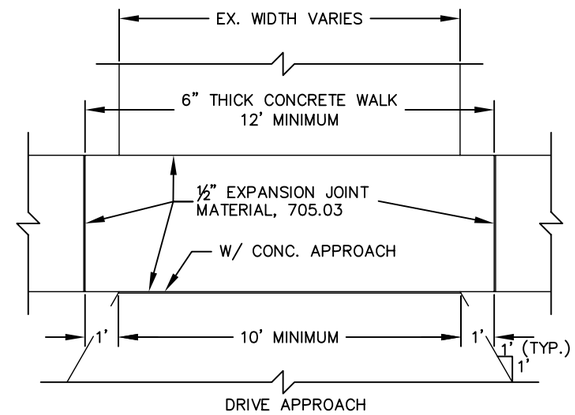

NOTES
GENERAL: THE DESIGN DETAILS SHOWN HEREON SHALL GOVERN THE CONSTRUCTION OF DRIVEWAYS UNLESS OTHERWISE SHOWN IN THE PROJECT PLANS.

JOINTS: IN ADDITION TO THE JOINTS SHOWN HEREON, IMPRESSED JOINTS SHALL BE PLACED IN PORTLAND CEMENT CONCRETE DRIVEWAYS AT INTERVALS NOT TO EXCEED 10' IN THE PORTION OF THE DRIVEWAY BACK OF THE APPROACH. FOR ASPHALT DRIVEWAYS, OMIT 1" EXPANSION JOINT AND IMPRESSED JOINTS.

THICKNESS: MINIMUM RESIDENTIAL THICKNESS REQUIRED SHALL BE 6" FOR PORTLAND CEMENT CONCRETE DRIVEWAYS OR 2" OF ASPHALT ON 6" OF AGGREGATE BASE FOR ASPHALT DRIVEWAYS.

*IMPRESSED JOINTS FOR PORTLAND CEMENT CONCRETE DRIVEWAYS SHALL BE ¼" MINIMUM WIDTH BY 2" DEPTH.

SIDEWALK THROUGH DRIVEWAY DETAIL

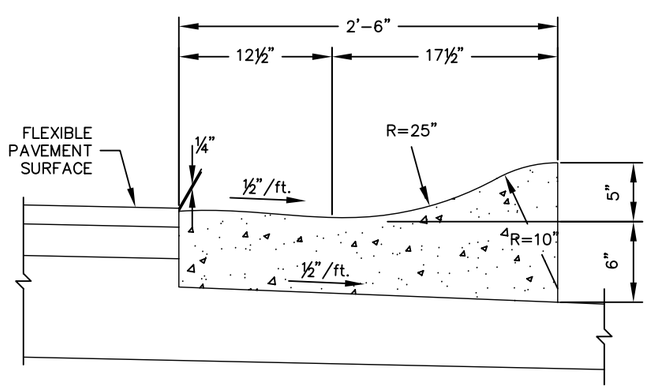

ITEM 609 CURB, TYPE F

NOTES
CURB, TYPE F SHALL BE CONSTRUCTED ACCORDING TO ITEM 609.04 OF THE 2005 STATE OF OHIO DEPARTMENT OF TRANSPORTATION CONSTRUCTION AND MATERIAL SPECIFICATIONS, EXCEPT FOR THE FOLLOWING:

CONSTRUCT ¼" WIDE CONTRACTION JOINTS AT EIGHT FOOT (8') INTERVALS TO A DEPTH OF TWO INCHES (2").

* TRANSVERSE SLOPE @ ¼" PER FT. (MAX.)
**TRANSVERSE SLOPE @ ½" PER FT. (TYP)
\+ OFFSET AS SHOWN ON PLAN

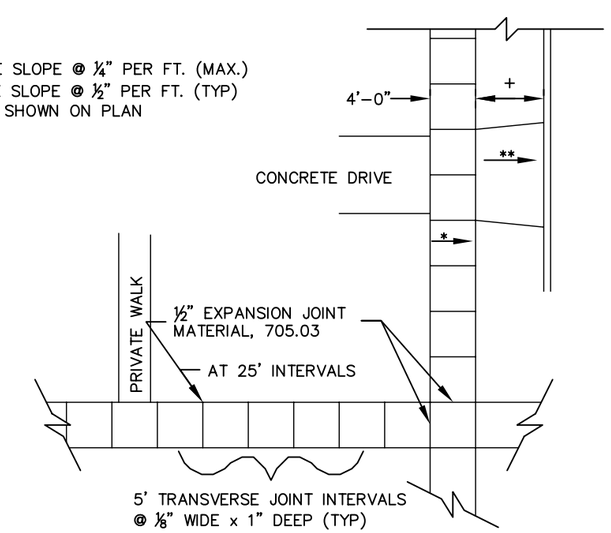

SIDEWALK DETAIL

03/06
04/17/07

CONCRETE CURB & WALK DETAILS

LUCAS COUNTY STANDARD
CONSTRUCTION DRAWINGS

RP-3

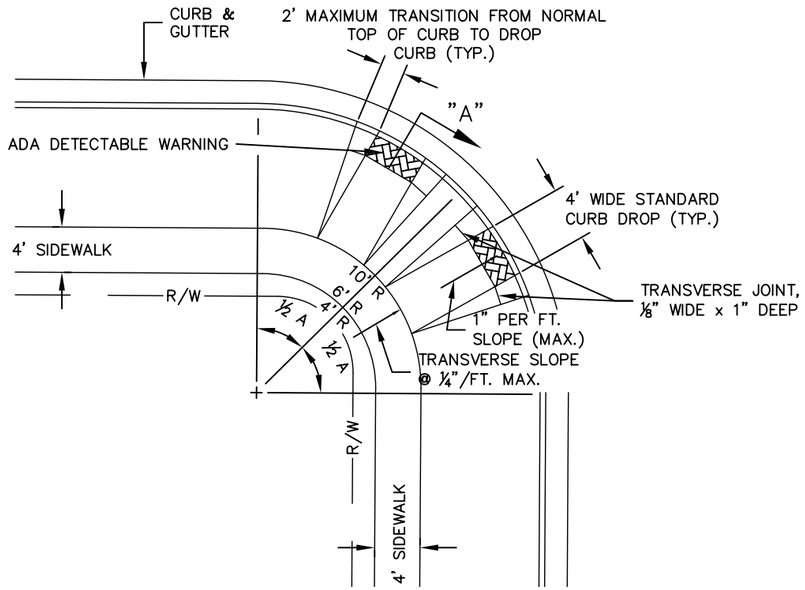

PLAN

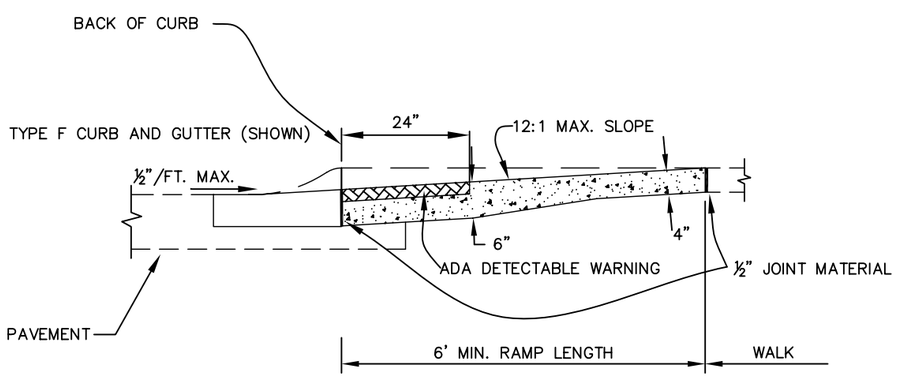

SECTION A

CURB RAMP DETAIL

NOTES

SURFACE TEXTURE: TEXTURE OF CONCRETE SURFACES SHALL BE OBTAINED BY COARSE BROOMING TRANSVERSE TO THE RAMP SLOPES AND SHALL BE ROUGHER THAN ADJACENT WALK.

EXPANSION JOINTS: SHALL BE PROVIDED IN THE CURB RAMP AS EXTENSIONS OF WALK JOINTS AND CONSISTENT WITH ITEM 608.03 REQUIREMENTS FOR A NEW CONCRETE WALK. A ½" ITEM 705.03 EXPANSION JOINT FILLER SHALL BE PROVIDED AROUND THE EDGE OF RAMPS BUILT IN EXISTING CONCRETE WALK. LINES SHOWN ON THIS DRAWING INDICATE THE RAMP EDGE AND SLOPE CHANGES AND ARE NOT NECESSARILY JOINT LINES.

TRUNCATED DOMES: INSTALL DETECTABLE WARNINGS (TRUNCATED DOMES) FOR A DISTANCE OF 24" FROM THE BACK OF THE CURB FOR THE ENTIRE WIDTH OF THE RAMP OPENING AS SHOWN ON DETAILS.

PAVERS WILL MEET ASTM C 902 CLASS SX, TYPE 1, OR C 936, OR C 1272 TYPE R.

ACCEPTABLE TRUNCATED DOME MANUFACTURERS AND PRODUCTS ARE:

1) WHITACRE–GREER FIREPROOFING COMPANY,
   1400 S. MAHONING AVE, ALLIANCE, OH, 44601, (800) WG PAVER
   ADA PAVER, 4"X8"X2¼", CLEAR RED (RUSTIC) #30.

2) HANOVER ARCHITECTURAL PRODUCTS,
   240 BENDER RD., HANOVER, PA. 17331, (717) 637–0500
   DETECTABLE WARNING PAVER, 12"X12"X2", OR 24"X24"X2",
   RED OR QUARRY RED.

3) ENDICOTT CLAY PRODUCTS,
   PO BOX 17, FAIRBURY, NE, 68352, (402) 729–5804
   HANDICAP DETECTABLE WARNING PAVER,
   4"X8"X2¼", RED BLEND.

4) ENGINEERED PLASTICS, INC.
   300 INTERNATIONAL DR., SUITE 100, WILLIAMSVILLE, NY, 14221,
   (800) 682–2525
   VITRIFIED POLYMER COMPOSITE (VPC), CAST–IN–PLACE TACTILE TILE,
   ARMOR TILE, 2'X4'X1⅜"±, BRICK RED.

PAVERS

PAVERS WILL BE LAID ON TOP OF A 4" UNREINFORCED CONCRETE BASE. SETTING BED AND JOINTS TO BE MORTARED IN ACCORDANCE WITH MANUFACTURER'S INSTRUCTION, OR WITH A MAXIMUM ½" THICK BED OF LATEX MODIFIED CEMENT MORTAR. MORTAR JOINTS TO A WIDTH NOT GREATER THAN ⅛" AND NOT LESS THAN 1/16". PAVERS SHALL NOT BE DIRECTLY TOUCHING EACH OTHER UNLESS THEY HAVE SPACING BARS.

MORTARED JOINTS ARE TO BE FLUSH WITH TOP SURFACE AND STRUCK SO AS TO GIVE A SMOOTH SURFACE. PAVERS SHALL BE LAID SUCH THAT JOINTS ARE LEVEL WITH ADJOINING JOINTS SO AS TO PROVIDE A SMOOTH TRANSITION FROM BRICK TO BRICK AND BRICK TO CONCRETE SURFACE.

THE SURFACE OF ANY TWO ADJACENT UNITS SHOULD NOT DIFFER BY MORE THAN ⅛" IN HEIGHT. BRICKS SHALL BE PLACED IN A RUNNING BOND PATTERN. FACE OF ALL BRICK SHALL BE CLEAN OF CEMENT AND PROTECTED SO AS TO AVOID CHIPPING DURING CONSTRUCTION.

CAST GRAY IRON DETECTABLE WARNING PLATES

PLATES WILL BE SET IN WET CONCRTE AND TAMPED INTO FINAL POSITION. FINISH THE CONCRETE AROUND THE PLATE AND CLEAN OFF ANY EXCESS CONCRETE ON PLATE.

ACCEPTABLE CAST GRAY IRON DETECTABLE WARNING PLATE MANUFACTURERS AND PRODUCTS ARE:

1) NEENAH FOUNDRY COMPANY
   DECTABLE WARNING PLATES (COLOR APPROVAL BASED ON SITE CHARACTERISTICS)

2) EAST JORDAN IRON WORKS
   7005 SERIES DECTABLE WARNING PLATES, (COLOR APPROVAL BASED ON SITE CHARACTERISTICS)

VITRIFIED POLYMER COMPOSITE (VPC) CAST–IN–PLACE TACTILE TILE

SITE CONDITIONS: ENVIRONMENTAL CONDITIONS AND PROTECTION: MAINTAIN MINIMUM TEMPERATURE OF 40 DEGREES F IN SPACES TO RECEIVE TACTILE TILES FOR AT LEAST 48 HOURS PRIOR TO INSTALLATIONS, DURING INSTALLATION, AND FOR NOT LESS THAN 48 HOURS AFTER INSTALLATION. STORE TACTILE TILE MATERIAL IN SPACES WHERE THEY WILL BE INSTALLED FOR AT LEAST 48 HOURS BEFORE BEGINNING INSTALLATION. SUBSEQUENTLY, MAINTAIN MINUMUM TEMPERATURE OF 40 DEGREES F IN AREAS WHERE WORK IS COMPLETED.

INSTALLATION: THE PHYSICAL CHARACTERISTICS OF THE CONCRETE SHALL BE CONSISTENT WITH THE CONTRACT SPECTIFICATIONS WHILE MAINTAINING A SLUMP RANGE OF 4–7 TO PERMIT SOLID PLACEMENT OF THE CAST–IN–PLACE TILE SYSTEM. AN OVERLY WET MIX WILL CAUSE THE CAST–IN–PLACE SYSTEM TO FLOAT, THEREFORE UNDER THESE CONDITONS SUITABLE WEIGHTS SUCH A 2 CONCRETE BLOCKS OR SANDBAGS (25 LBS.) SHALL BE PLACED ON EACH TILE.

THE CONCRETE POURING AND FINISHING OPERATIONS REQUIRE TYPICAL MASON'S TOOLS, HOWEVER, A 4' LONG LEVEL WITH ELECTRONIC SLOPE READOUT, 25 LB. WEIGHTS, VIBRATOR AND SMALL SLEDGE HAMMER WITH 2" x 6" x 20" WOOD TAMPING PLATE ARE SPECIFIC TO THE INSTALLATION OF THE CAST–IN–PLACE SYSTEM.

THE CONCRETE SHALL BE POURED AND FINISHED, TRUE AND SMOOTH TO THE REQUIRED DIMENSIONS AND SLOPE PRIOR TO TILE PLACEMENT. IMMEDIATELY AFTER FINISHING THE CONCRETE, THE ELECTRONIC LEVEL SHOULD BE USED TO CHECK THAT THE REQUIRED SLOPE IS ACHIEVED. THE TILE SHALL BE PLACED TRUE AND SQUARE TO THE CURB EDGE IN ACCORDANCE WITH THE CONTRACT DRAWINGS. THE CAST–IN–PLACE TILES SHALL BE TAMPED OR VIBRATED INTO THE FRESH CONCRETE TO ENSURE THAT THE FIELD LEVEL OF TILE IS FLUSH TO THE ADJACENT CONCRETE SURFACE. THE CONTRACT DRAWINGS INDICATE THAT THE TILE FIELD LEVEL (BASE OF TRUNCATED DOME) IS FLUSH TO ADJACENT SURFACES TO PERMIT PROPER WATER DRAINAGE AND ELIMINATE TRIPPING HAZARDS BETWEEN ADJACENT FINISHES.

IMMEDIATELY AFTER TILE PLACEMENT, THE TILE ELEVATION IS TO BE CHECKED TO ADJACENT CONCRETE. THE TILE ELEVATION AND SLOPE SHOULD BE SET CONSISTENT WITH CONTRACT DRAWINGS TO PERMIT WATER DRAINAGE TO CURB AS THE DESIGN DICTATES.

WHILE CONCRETE IS WORKABLE, A STEEL TROWEL SHALL BE USED TO TROWEL THE CONCRETE AROUND THE TILE PERIMETER TO THE FIELD LEVEL OF THE TILE.

DURING AND AFTER THE TILE INSTALLATION AND THE CONCRETE CURING STAGE, IT IS IMPERATIVE THAT THERE IS NO WALKING, LEANING OR EXTERNAL FORCES PLACED ON THE TILE TO ROCK THE TILE, CAUSING A VOID BETWEEN THE UNDERSIDE OF TILE AND CONCRETE.

FOLLOWING TILE PLACEMENT, REVIEW INSTALLATION TOLERANCES TO CONTRACT DRAWINGS AND ADJUST TILE BEFORE THE CONCRETE SETS, 2 SUITABLE WEIGHTS OF 25 LB. EACH SHALL BE PLACED ON EACH TILE AS NECESSARY TO ENSURE SOLID CONTACT OF TILE UNDERSIDE OF CONCRETE.

FOLLOWING THE CURING OF THE CONCRETE, THE PROTECTIVE PLASTIC WRAP IS TO BE REMOVED FROM THE TILE FACE BY CUTTING THE PLASTIC WITH A SHARP KNIFE TIGHT TO THE CONCRETE/TILE INTERFACE. IF CONCRETE BLEDDING OCCURS, A WIRE BRUSH WILL CLEAN THE RESIDUE WITHOUT DAMAGE TO THE TILE SURFACE.

CLEANING AND PROTECTING: PROTECT TILES AGAINST DAMAGE DURING CONSTRUCTION PERIOD TO COMPLY WITH TACTILE TILE MANUFACTURER'S SPECIFICATION.

PROTECT TILES AGAINST DAMAGE FROM ROLLING LOADS FOLLOWING INSTALLATION BE COVERING WITH PLYWOOD OR HARDWOOD.

PAYMENT: WALK AND CURB, ITEMS 608 AND 609, SHALL BE MEASURED THROUGH THE CURB RAMP AREA PAID FOR UNDER THEIR RESPECTIVE ITEMS. ITEM 608 – CURB RAMP, AS PER PLAN, EACH CONSTRUCTED IN NEW CURB AND WALK SHALL INCLUDE THE COST OF ANY ADDITIONAL MATERIALS AND INSTALLATION (INCLUDING TRUNCATED DOMES), GRADING, FORMING AND FINISHING. ITEM 608 – CURB RAMP, AS PER PLAN, SQUARE FOOT, CONSTRUCTED IN EXISTING CURB AND WALK SHALL INCLUDE THE COST OF FURNISHING AND INSTALLING ALL MATERIALS (INCLUDING TRUNCATED DOMES), GRADING, FORMING, AND FINISHING OF THE CURB AND WALK OF THE CURB RAMP. REMOVAL OF EXISTING CURB AND WALK SHALL BE PAID FOR UNDER ITEM 202.

TURNAROUND, TYPE A

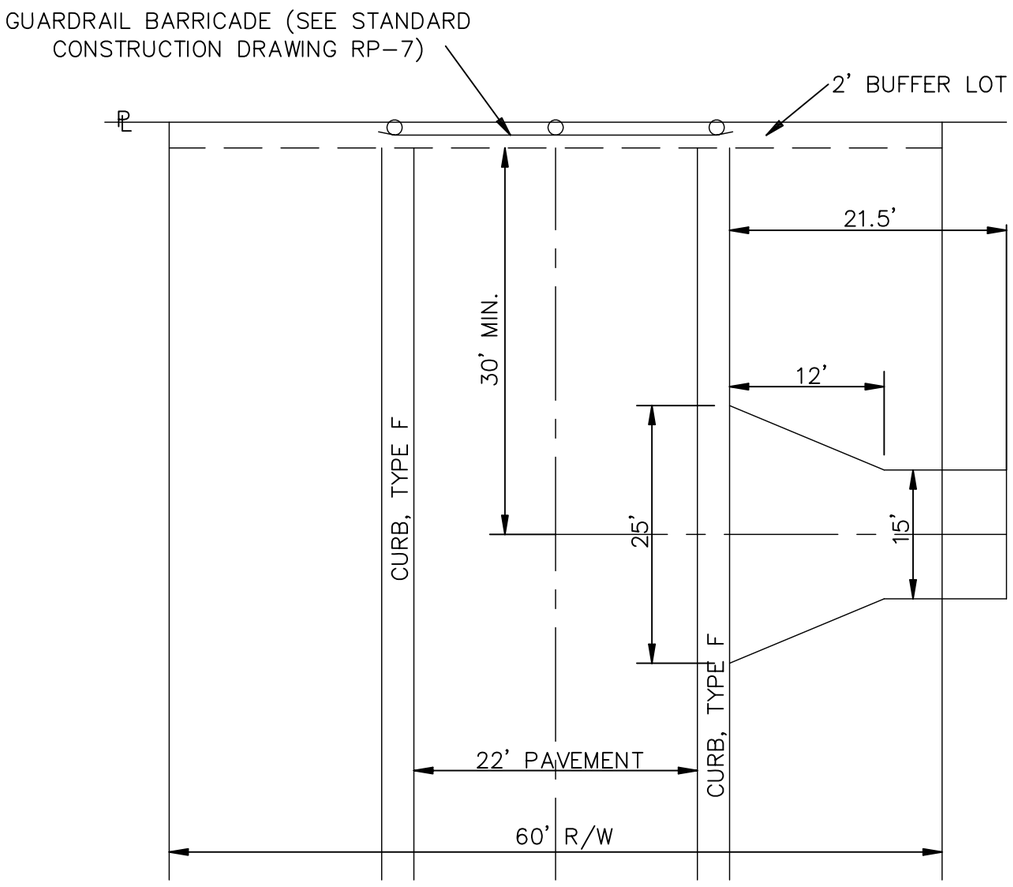

TYPICAL SECTION FOR TYPE A

① ITEM 448 3" ASPHALT CONCRETE SURFACE COURSE, TYPE I OR TYPE II
② ITEM 304 8" AGGREGATE BASE

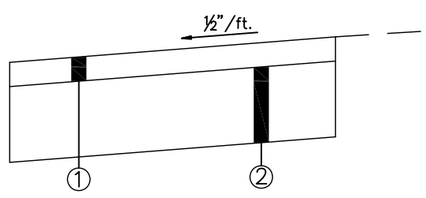

TURNAROUND, TYPE B

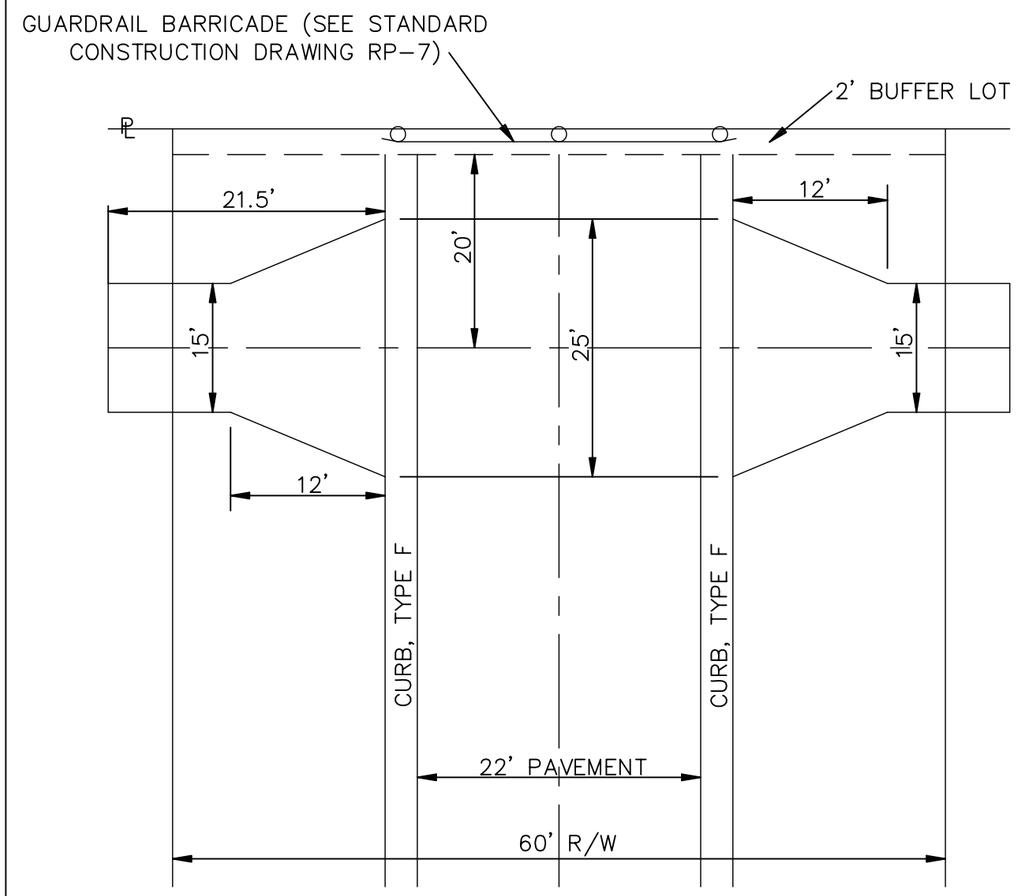

TYPICAL SECTION FOR TYPE B

① ITEM 448 3" ASPHALT CONCRETE SURFACE COURSE, TYPE I OR TYPE II
② ITEM 304 8" AGGREGATE BASE

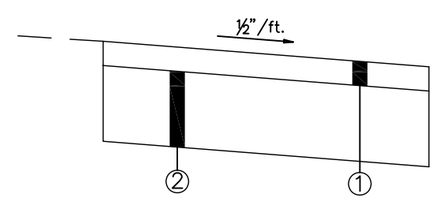

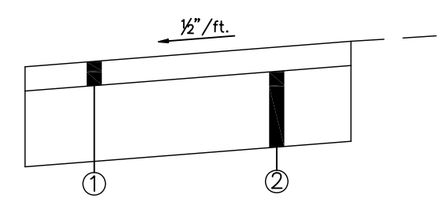

TURNAROUNDS

LUCAS COUNTY STANDARD CONSTRUCTION DRAWINGS

RP-5

SECTION A–A

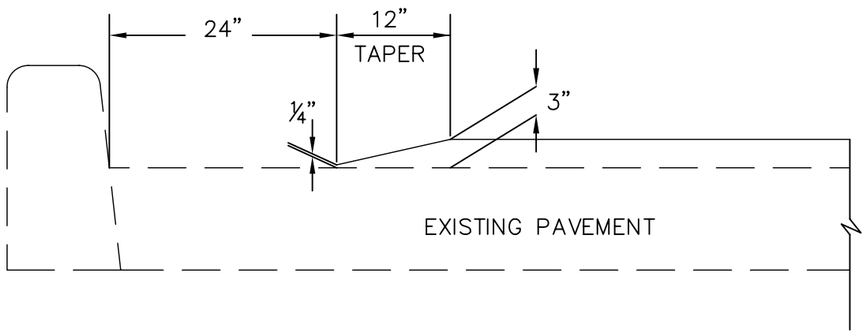

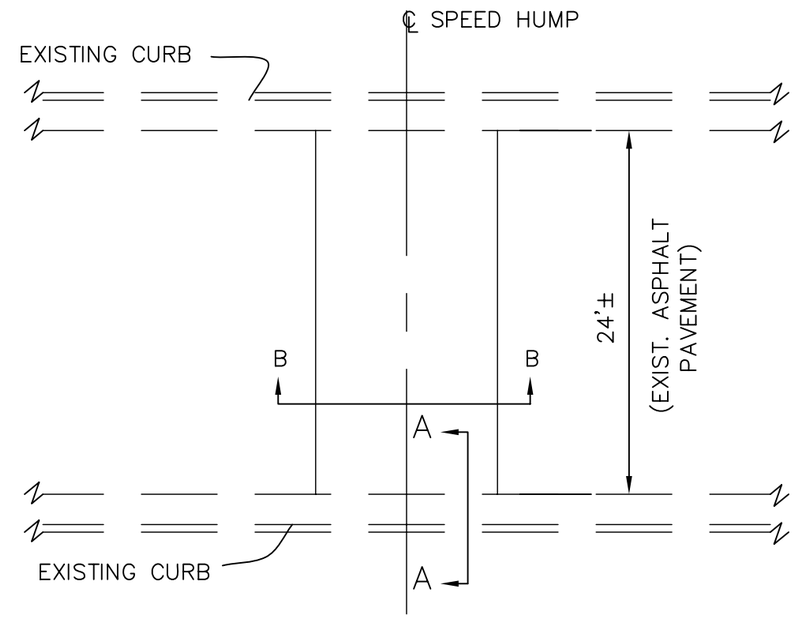

PLAN VIEW

SECTION B–B

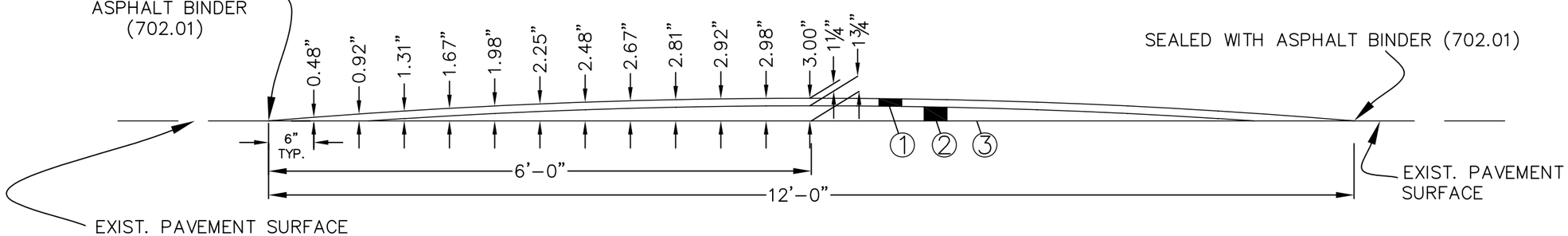

SPEED HUMP DETAIL

1. ITEM 448– 1¼" ASPHALT CONCRETE SURFACE COURSE, TYPE 1, PG 64–22
2. ITEM 448– ¼" TO 1¾" ASPHALT CONCRETE SURFACE COURSE, TYPE 1, PG 64–22
3. ITEM 407– TACK COAT (@ 0.075 GAL/S.Y.)

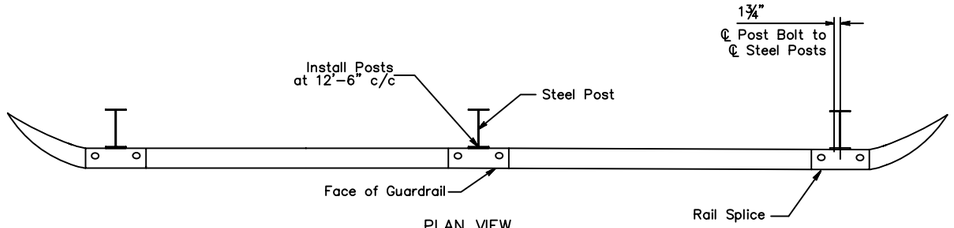

PLAN VIEW
(Steel Posts shown)

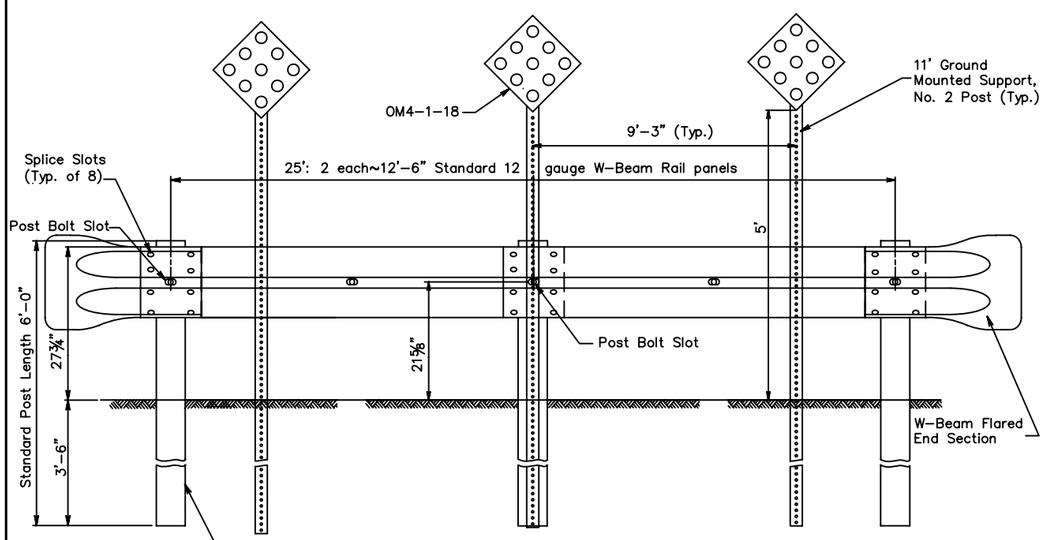

ELEVATION
(Wood Posts shown)

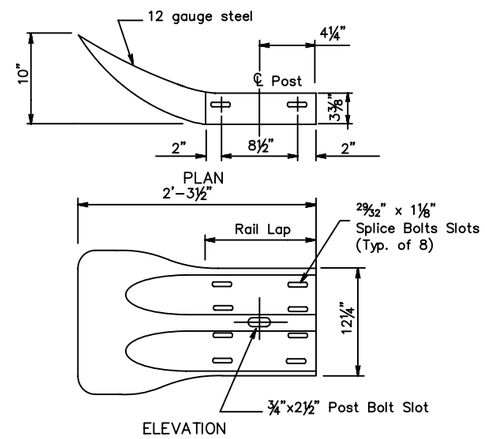

W-BEAM FLARED END SECTION

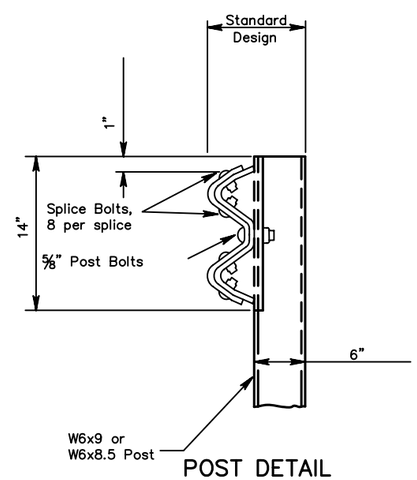

POST DETAIL
(Steel Post Shown)

NOTES

SEE ODOT STANDARD DRAWING GR-1.1, GR-2.1 AND TC-41.20 FOR ADDITIONAL DETAILS AND SPECIFICATIONS NOT COVERED ON THIS DRAWING.

RAIL: USE W-BEAM RAIL MEETING AASHTO M 180 TYPE II CLASS A, AS SPECIFIED IN CMS 606.

POSTS: POSTS MAY BE CONSTRUCTED OF WOOD OR STEEL. WOOD POSTS MAY BE ROUND OR 6"X8" SQUARE-SAWED. THE ROUND POSTS SHALL BE 8"±1" IN DIAMETER AT THE TOP AND NOT MORE THAN 3" LARGER AT THE BUTT WITH A UNIFORM TAPER. POSTS SHALL BE PRESSURE-TREATED AS PER CMS 710.14. BORE BOLT HOLES AND, IF REQUIRED, TRIM THE TOPS OF POSTS AFTER THE POSTS ARE SET. STEEL POSTS ARE TO BE W6X9 OR W6X8.5 GALVANIZED STEEL. USE THE SAME TYPE OF POST THROUGHOUT THE LENGTH OF THE PROJECT UNLESS OTHERWISE SPECIFIED IN THE PLANS OR PERMITTED BY THE ENGINEER. ALL POSTS ARE 6'-0" LONG UNLESS SPECIFIED OTHERWISE IN THE CONTRACT DOCUMENT. POSTS MAY BE SET IN DRILLED HOLES OR MAY BE DRIVEN TO GRADE.

ALTERNATE POSTS: ENGINEERED GUARDRAIL POSTS HAVING MET NCHRP 350 CRITERIA, AND LISTED ON THE OFFICE OF MATERIALS MANAGEMENT'S APPROVED LIST ARE PERMITTED AS AN EQUAL ALTERNATE WHEN INSTALLED ACCORDING TO THE MANUFACTURER'S INSTRUCTIONS AND WITHIN THE LIMITATIONS SHOWN ON THE APPROVED LIST.

WASHERS: INSTALL APPROPRIATE SIZED STANDARD GALVANIZED STEEL WASHERS ON THE NUT SIDE OF BOLTS INSTALLED ON WOOD POSTS.

GUARDRAIL HEIGHT: FOR INITIAL INSTALLATION, CONSTRUCT THE GUARDRAIL WITHIN ±1" OF THE STANDARD HEIGHT, H, OR 27¾" TO THE TOP OF W-BEAM RAIL.

PAYMENT: ALL LABOR, EQUIPMENT AND MATERIALS INCLUDING GUARDRAIL PANELS, FLARED END SECTIONS, GUARDRAIL POSTS, OBJECT MARKER SIGNS AND SIGN POSTS SHALL BE INCLUDED IN THE ITEM 606, EACH GUARDRAIL BARRICADE.

GUARDRAIL BARRICADE DETAILS

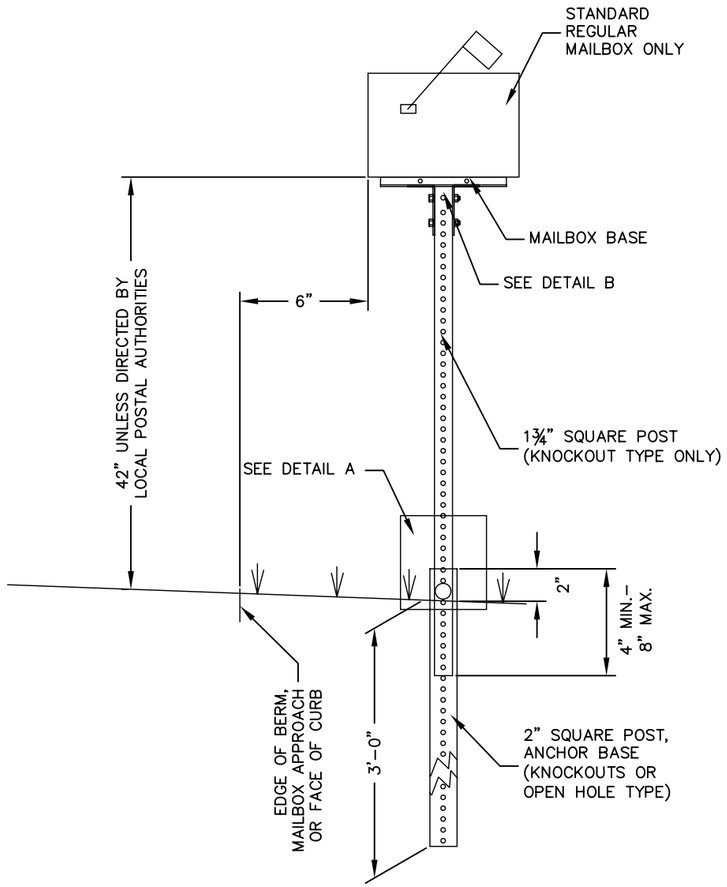

TYPE 2

NOTE: LUCAS COUNTY ROAD
MAINTENACE TYPICAL INSTALLATION

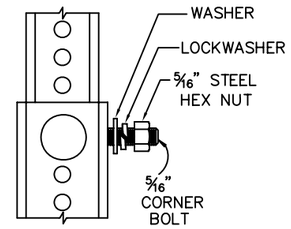

DETAIL A

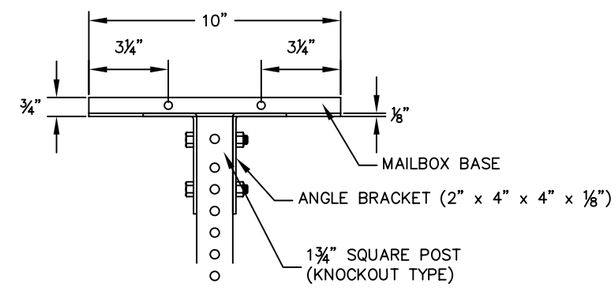

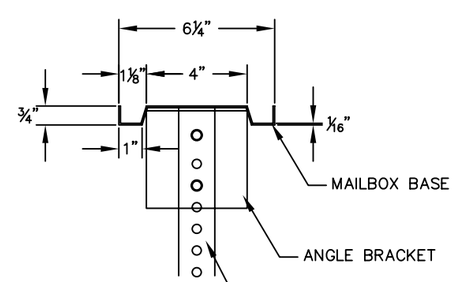

DETAIL B

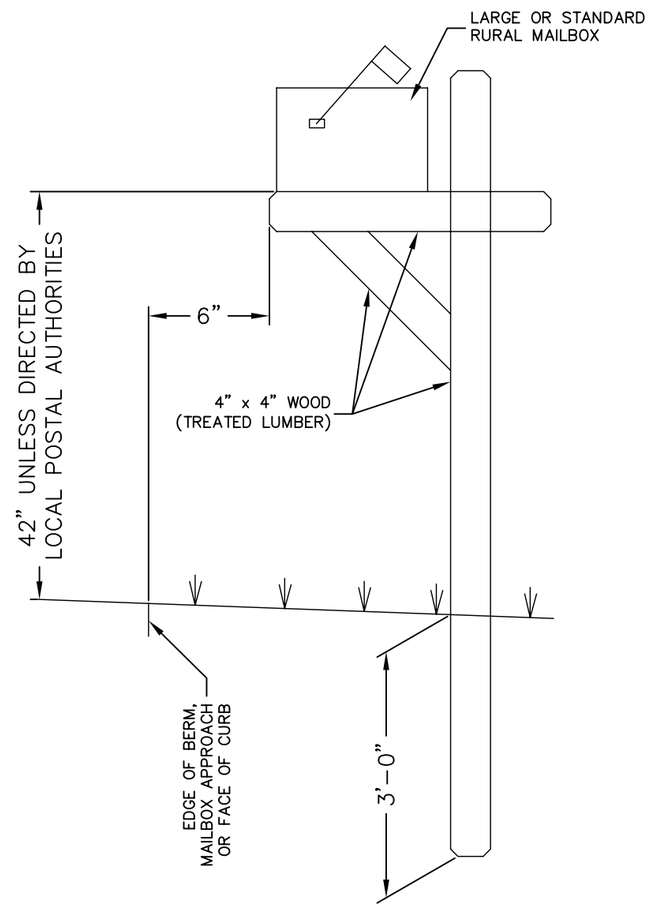

TYPE 1

LOCAL SUPPLIER OF BRACKET IS

WATERVILLE SHEET METAL CO. INC.
1210 WATERVILLE–MONCLOVA RD.
WATERVILLE, OH 43566
(419)878–5050

OR EQUAL AS APPROVED BY THE LUCAS
COUNTY ENGINEER.

MAILBOX SUPPORT DETAILS

MAILBOX SUPPORT (TYPE 1 & 2)

LUCAS COUNTY STANDARD
CONSTRUCTION DRAWINGS

RP–8

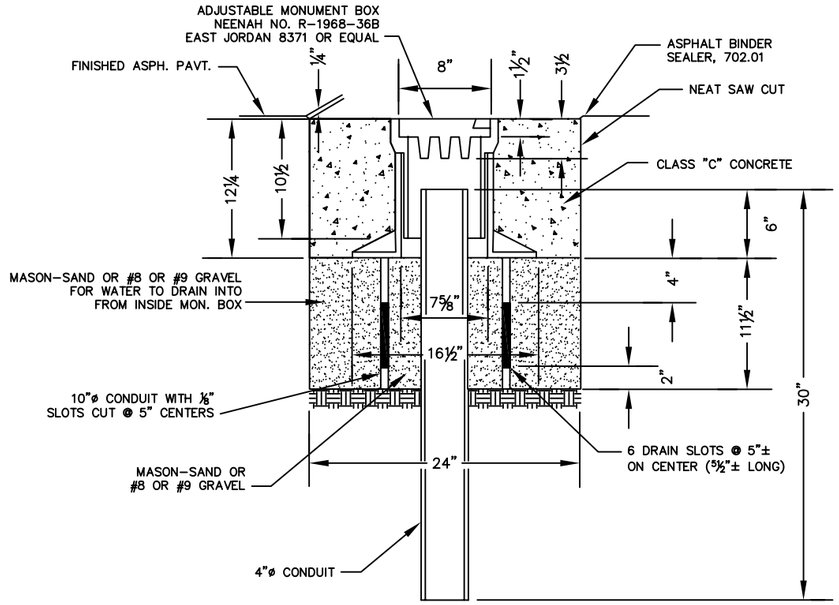

MONUMENT AND CONCRETE IN 4" CONDUIT TO BE PLACED BY LUCAS COUNTY FORCES.

MONUMENT ASSEMBLY, AS PER PLAN (TYPE 1)

USE THIS IF THERE IS NO EXISTING MONUMENT BELOW.

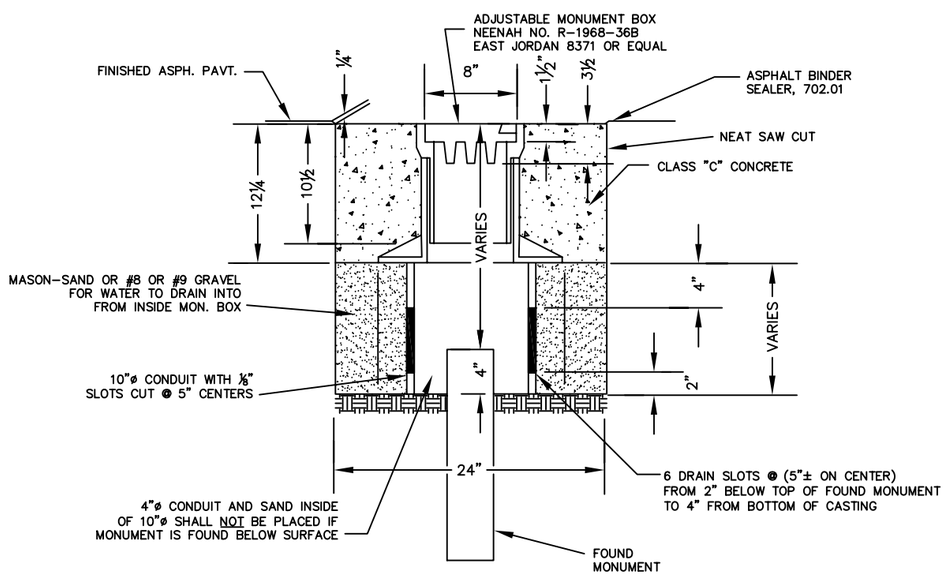

MONUMENT ASSEMBLY, AS PER PLAN (TYPE 2)

USE THIS IF THERE IS AN EXISTING MONUMENT BELOW.

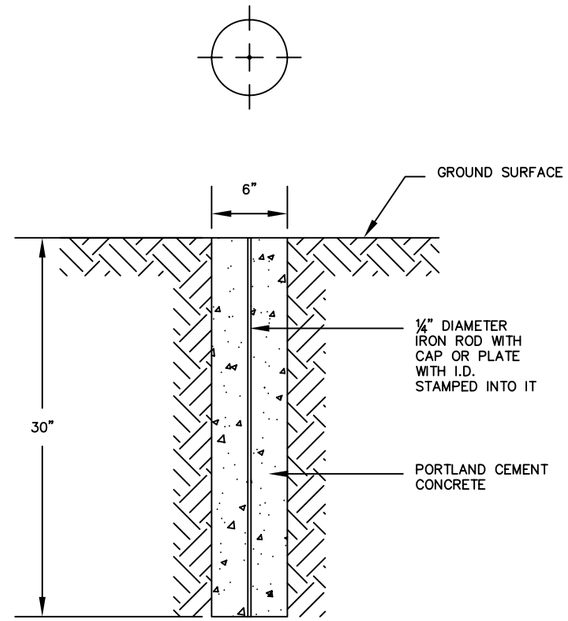

A MONUMENT SHALL BE PLACED AT EACH CHANGE IN DIRECTION ON THE BOUNDARY OF THE PLAT, AND ONE SUCH MONUMENT SHALL BE PLACED ON THE CENTERLINE OF RIGHT-OF-WAY OF EACH STREET INTERSECTION, AND AT THE BEGINNING AND END OF ALL STREET CURVES.

A TYPE A MONUMENT SHALL BE PLACED IN ALL UNPAVED AREAS. A TYPE B MONUMENT SHALL BE PLACED IN ALL PAVED AREAS.

TYPE A

A CYLINDRICAL CONCRETE MARKER SIX (6") INCHES IN DIAMETER AND THIRTY (30") INCHES IN LENGTH WITH A QUARTER (¼") INCH IRON ROD CAST AT THE CENTRAL AXIS OF THE CYLINDER. SAID MARKER SHALL BE PLACED IN A VERTICAL POSITION WITH ITS TOP BEING LEVEL WITH THE SURFACE OF THE SURROUNDING GROUND.

THE TYPE A MONUMENT SHALL BE IDENTIFIED WITH A DURABLE MARKER (I.E. CAP, PLATE) BEARING THE SURVEYOR'S OHIO REGISTRATION NUMBER AND/OR NAME OR COMPANY NAME PER ORC 4733-37-03.

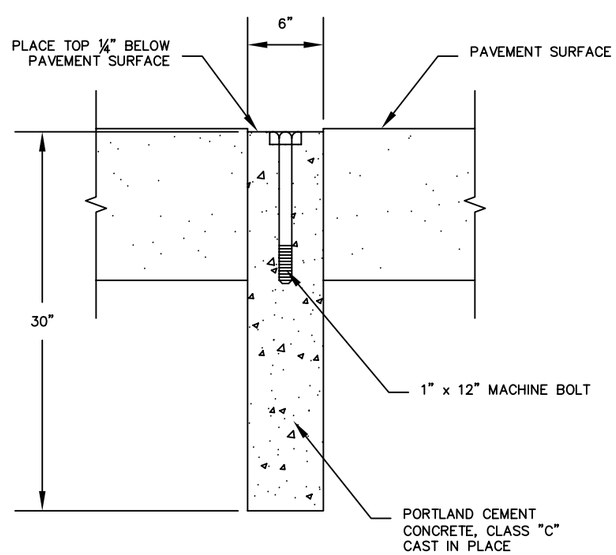

TYPE B

A CYLINDRICAL CONCRETE MARKER AS DESCRIBED UNDER TYPE A EXCEPT THAT A MACHINE TYPE IRON BOLT (WITHOUT NUT) OF ONE (1") INCH IN DIAMETER BY TWELVE (12") INCHES IN LENGTH SHALL BE PLACED IN A VERTICAL POSITION WITH THE HEAD OF THE BOLT UPWARD AND LEVEL WITH THE SURFACE OF THE PAVEMENT. A POINT SHALL BE MARKED ON THE HEAD OF THE BOLT TO INDICATE THE EXACT POINT REFERRED TO ON THE FINAL PLAT.

03/06
03/20/09

ROADWAY MONUMENTS

LUCAS COUNTY STANDARD CONSTRUCTION DRAWINGS

RP-9

MONUMENT ASSEMBLIES, AS PER PLAN (TYPE 1A OR 2A)
MONUMENTS SHALL BE CONSTRUCTED IN ACCORDANCE WITH THE FOLLOWING DETAILS.

THE LUCAS COUNTY ENGINEERS OFFICE HAS REFERENCED ALL CONTROL POINTS TO RECEIVE A MONUMENT ASSEMBLY. THE LUCAS COUNTY ENGINEERS OFFICE WILL PROVIDE THE SHORT REFERENCES FOR MONUMENT ASSEMBLY INSTALLATION UPON RECEIVING A THREE (3) WORKING DAY NOTICE.

ALL WORK INVOLVED IN THE INSTALLATION OF THE MONUMENT ASSEMBLY, SHALL BE PAID FOR AT THE CONTRACT PRICE, COMPLETE IN PLACE.

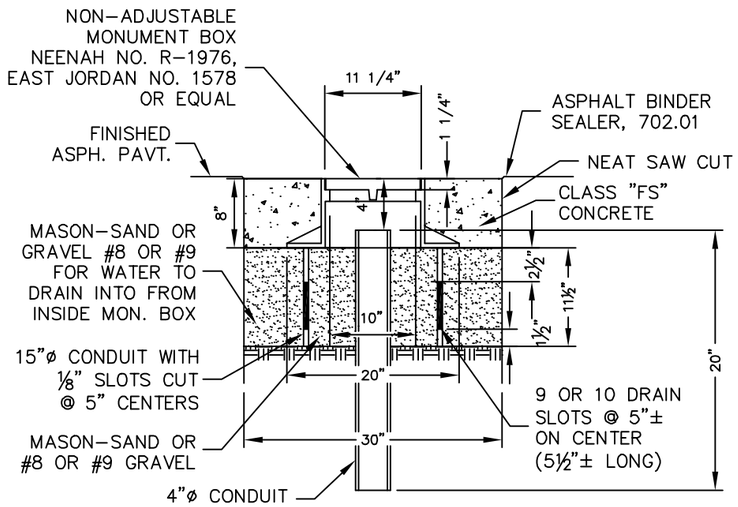

MONUMENT AND CONCRETE INSIDE 4" CONDUIT TO BE PLACED BY LUCAS COUNTY FORCES.

MONUMENT ASSEMBLY, AS PER PLAN (TYPE 1A)

USE THIS IF THERE IS NO EXISTING MONUMENT BELOW.

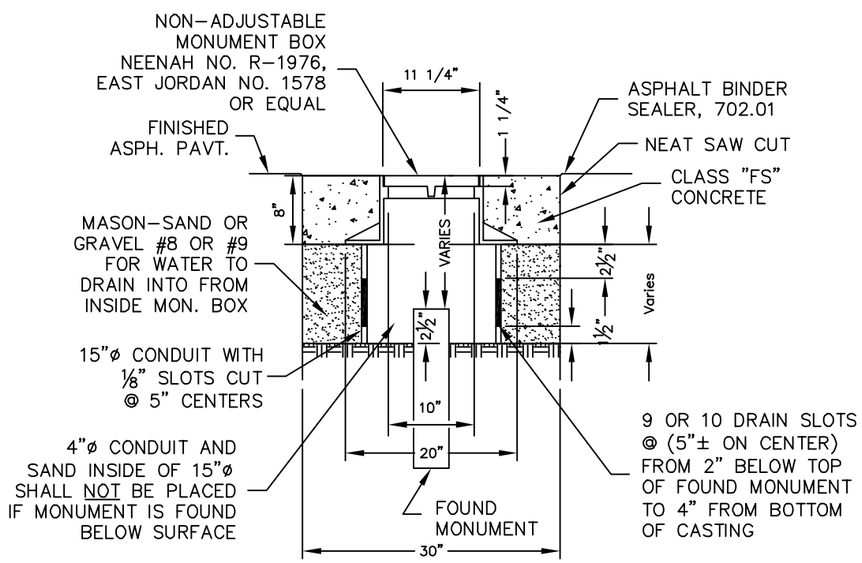

MONUMENT ASSEMBLY, AS PER PLAN (TYPE 2A)

USE THIS IF THERE IS AN EXISTING MONUMENT BELOW.

MONUMENT ASSEMBLIES, AS PER PLAN (TYPE 1B OR 2B)
MONUMENTS SHALL BE CONSTRUCTED IN ACCORDANCE WITH THE FOLLOWING DETAILS.

THE LUCAS COUNTY ENGINEERS OFFICE HAS REFERENCED ALL CONTROL POINTS TO RECEIVE A MONUMENT ASSEMBLY. THE LUCAS COUNTY ENGINEERS OFFICE WILL PROVIDE THE SHORT REFERENCES FOR MONUMENT ASSEMBLY INSTALLATION UPON RECEIVING A THREE (3) WORKING DAY NOTICE.

ALL WORK INVOLVED IN THE INSTALLATION OF THE MONUMENT ASSEMBLY, SHALL BE PAID FOR AT THE CONTRACT PRICE, COMPLETE IN PLACE.

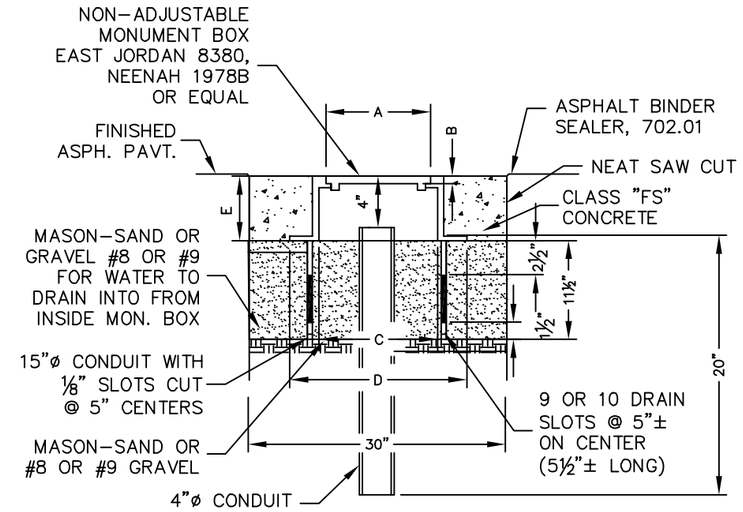

MONUMENT AND CONCRETE INSIDE 4" CONDUIT TO BE PLACED BY LUCAS COUNTY FORCES.

MONUMENT ASSEMBLY, AS PER PLAN (TYPE 1B)

USE THIS IF THERE IS NO EXISTING MONUMENT BELOW.

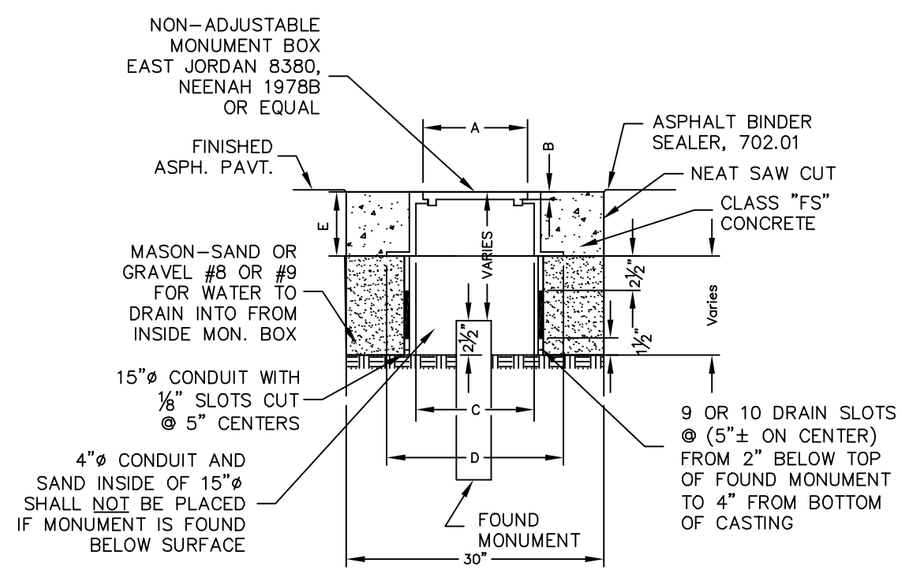

MONUMENT ASSEMBLY, AS PER PLAN (TYPE 2B)

USE THIS IF THERE IS AN EXISTING MONUMENT BELOW.

MONUMENT MODEL	A	B	C	D	E
EAST JORDAN 8380	12 3/16"	7/8"	11"	20 5/6"	7 1/2"
NEENAH 1978B	12"	3/4"	10 5/6"	20 1/2"	7 3/8"

03/06
03/20/09

ROADWAY MONUMENTS

LUCAS COUNTY STANDARD CONSTRUCTION DRAWINGS

RP-9

CURB INLET CASTING

NEENAH R-3159-A,
EAST JORDAN 7020 WITH
M2 SINUSOIDAL GRATE &
T1 BACK, AS SHOWN, OR
EQUAL

NOTE: THIS CASTING IS NOT TO BE USED WITH "TYPE F" MOUNTABLE CURB.

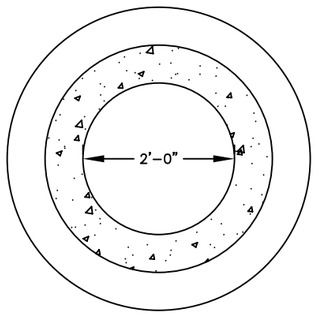

SECTION A-A

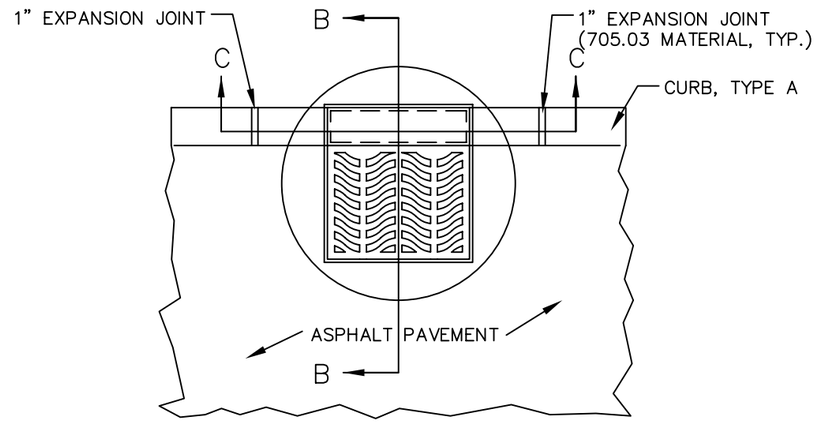

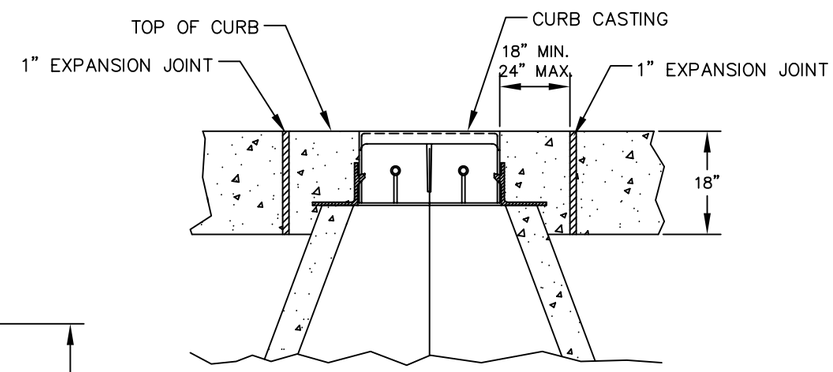

SECTION C-C

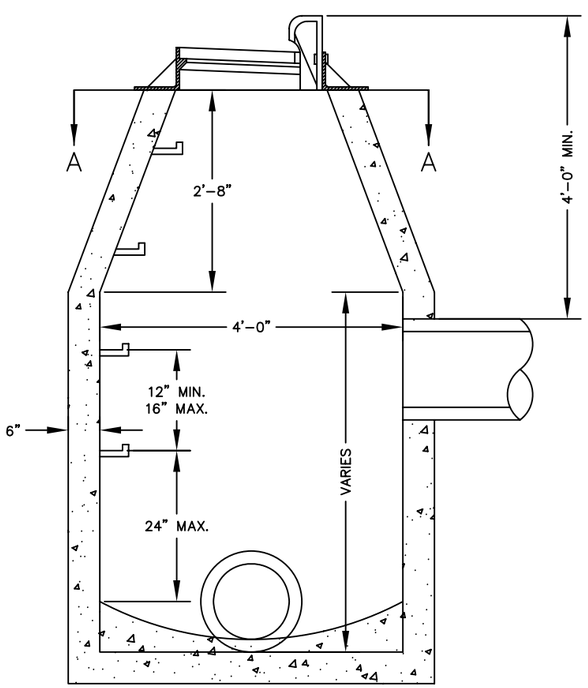

SECTIONAL ELEVATION

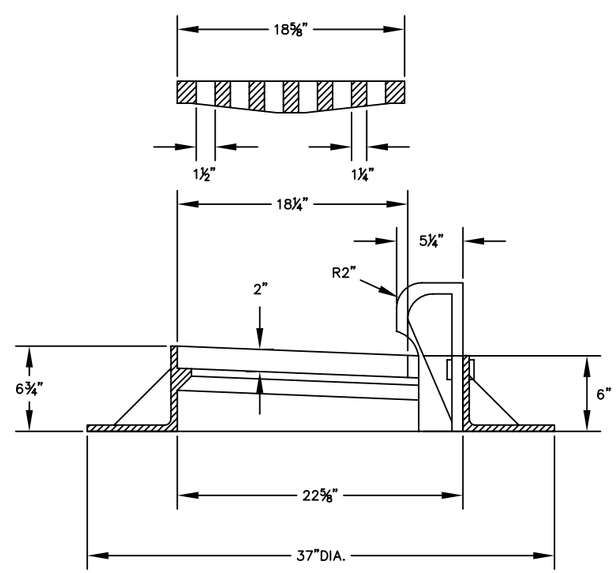

SECTION B-B

NOTES

CASTINGS: THE DESIGN SHALL BE ESSENTIALLY THE SAME AND EQUALLY AS STRONG AS THOSE SHOWN.

THE FOLLOWING TEXT SHALL BE CAST INTO THE TOP OF THE CURB CASTING:

"DUMP NO WASTE" AND **"DRAINS TO WATERWAY"**

TEXT SHALL BE PRINTED IN BOLD, CAPITAL LETTERS WITH A MINIMUM HEIGHT OF ¾". "WATERWAY" MAY BE SUBSTITUTED WITH "STREAM","RIVER","LAKE", ETC. ACTUAL PLACEMENT AND LOGO MAY VARY PER MANUFACTURER.

BEARING AREAS: THE FRAME AND GRATE SHALL BE SO FITTED AND FINISHED AS TO PROVIDE A FIRM AND EVEN SEAT. NO PROJECTIONS SHALL EXIST ON BEARING AREAS OF EITHER CASTING AND THE GRATE SHALL SEAT IN ITS FRAME WITHOUT ROCKING.

WALLS: WHEN USED IN PLACE OF CONCRETE, BRICK SIDE WALLS SHALL BE 8" NOMINAL THICKNESS.

PRECAST CONSTRUCTION: CONCRETE SHALL MEET THE REQUIREMENTS OF CMS 706.13. PRECAST WALLS SHALL HAVE A MINIMUM THICKNESS OF 6" AND REINFORCING SHALL BE SUFFICIENT TO PERMIT SHIPPING AND PLACEMENT WITHOUT DAMAGE.

OPENINGS: PIPE OPENINGS SHALL BE THE O.D. OF THE PIPE BEING SUPPLIED PLUS 2" WHEN FABRICATED OR FIELD CUT. FILL ANY VOIDS PER CMS 601.

DEPTH: STRUCTURE SHALL BE CONSTRUCTED SO THAT THE MINIMUM DEPTH FROM T/C TO TOP OF CONDUIT IS FOUR FEET (4').

BLOCKOUTS: BLOCKOUTS SHALL BE PAVED WITH CLASS C CONCRETE IN CURB AND GUTTER AND PAID FOR AS A PART OF THE CURB AND GUTTER WITH NO DEDUCTION IN CURB AND GUTTER QUANITITIES BECAUSE OF THE CASTINGS.

STEPS: STEPS SHALL BE PROVIDED WHERE THE DEPTH EXCEEDS 6' AND SHALL MEET THE MATERIAL REQUIREMENTS OF ITEM 604 OF THE ODOT CONSTRUCTION AND MATERIAL SPECIFICATIONS.

PAYMENT: ALL MATERIALS AND LABOR, INCLUDING EXCAVATION AND BACKFILLING, SHALL BE PAID UNDER FOR ITEM 604 TYPE A-1 CATCH BASIN.

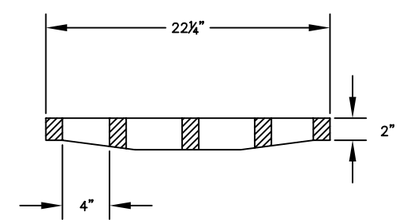

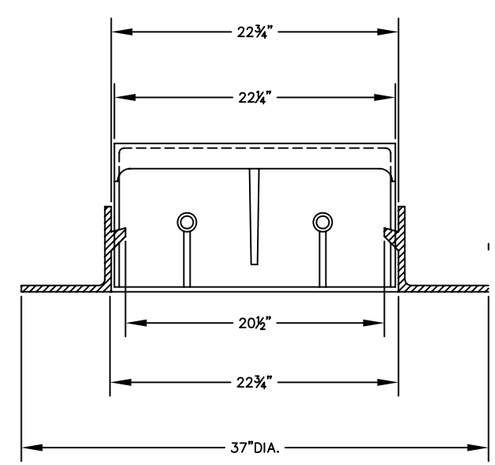

SECTION C-C

03/06
04/17/07

TYPE A-1 CATCH BASIN

LUCAS COUNTY STANDARD CONSTRUCTION DRAWINGS

CB-1

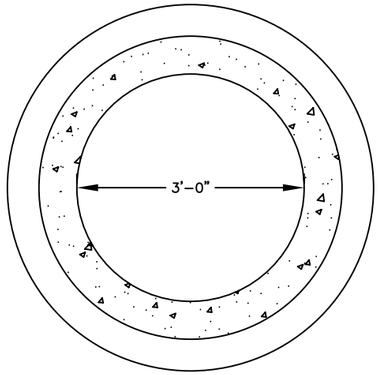

SECTION A–A

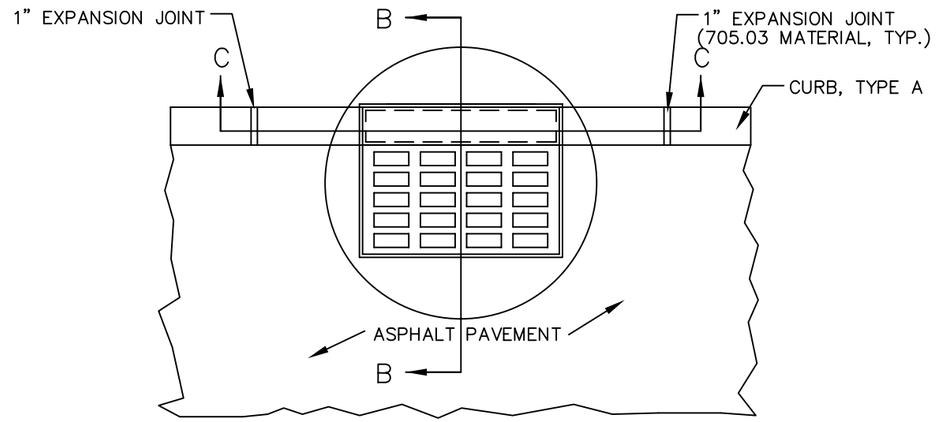

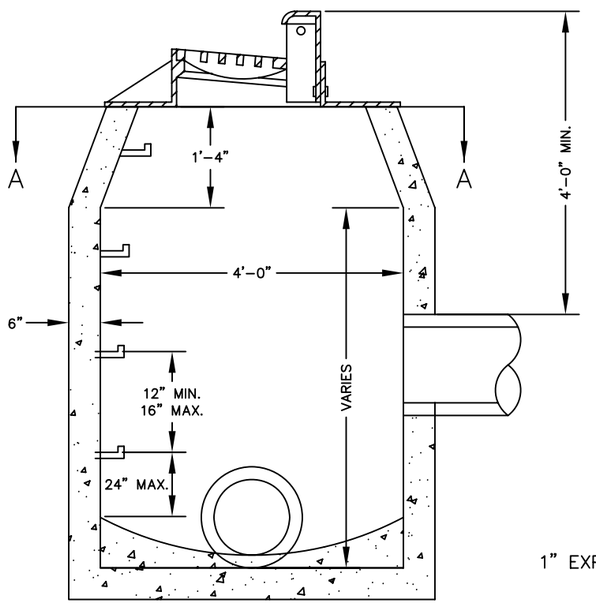

SECTIONAL ELEVATON

CURB INLET CASTING

A–2 (USE WITH CURB, TYPE A) NEENAH R–3246–F, AS SHOWN, EAST JORDAN 7037 WITH M2 GRATE & T1 BACK, OR EQUAL

A–4 (USE WITH CURB, TYPE F) NEENAH R–3246–E, AS SHOWN, EAST JORDAN 7037 WITH M2 GRATE & T2 BACK, OR EQUAL

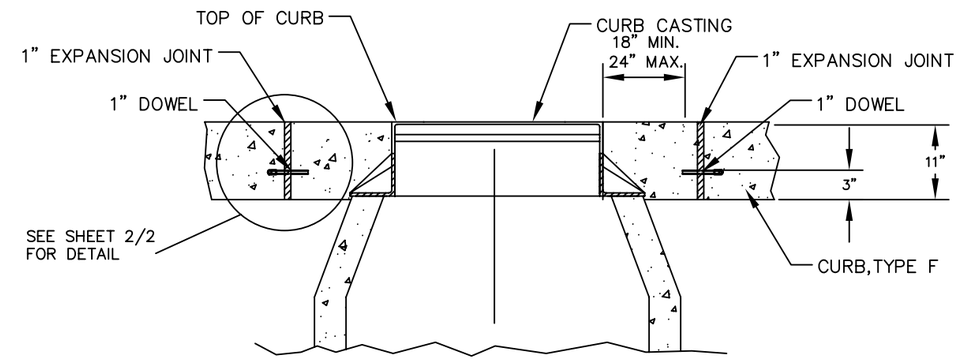

SECTION C–C

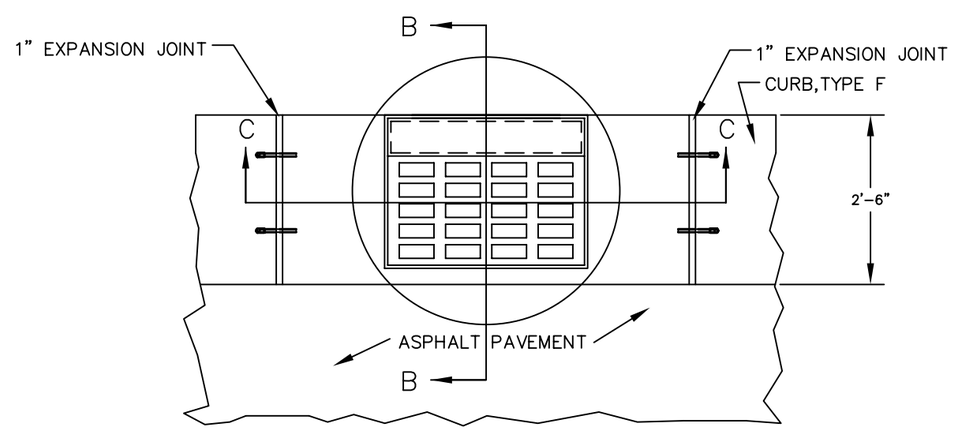

TYPE A–2/A–4 CATCH BASIN

LUCAS COUNTY STANDARD CONSTRUCTION DRAWINGS

CB–2

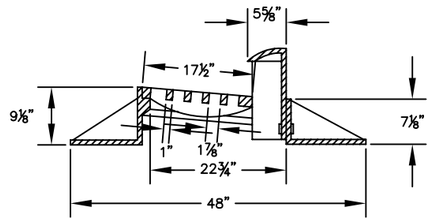

R-3246-E (A-4 BACK)

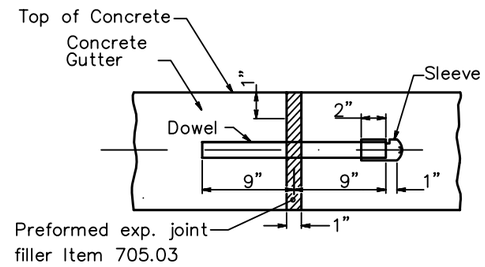

SECTION THROUGH EXP. JOINT

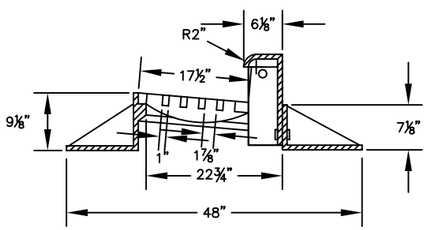

R-3246-F (A-2 BACK)

SECTION B-B

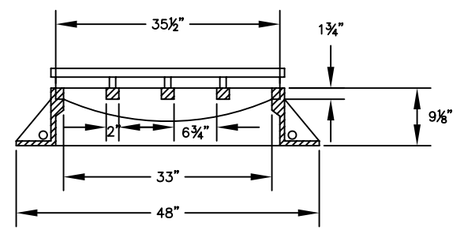

R-3246-F

SECTION C-C

NOTES

CASTINGS: THE DESIGN SHALL BE ESSENTIALLY THE SAME AND EQUALLY AS STRONG AS THOSE SHOWN.

THE FOLLOWING TEXT SHALL BE CAST INTO THE TOP OF THE CURB CASTING:

"DUMP NO WASTE" AND **"DRAINS TO WATERWAY"**

TEXT SHALL BE PRINTED IN BOLD, CAPITAL LETTERS WITH A MINIMUM HEIGHT OF ¾". "WATERWAY" MAY BE SUBSTITUTED WITH "STREAM","RIVER","LAKE", ETC. ACTUAL PLACEMENT AND LOGO MAY VARY PER MANUFACTURER.

BEARING AREAS: THE FRAME AND GRATE SHALL BE SO FITTED AND FINISHED AS TO PROVIDE A FIRM AND EVEN SEAT. NO PROJECTIONS SHALL EXIST ON BEARING AREAS OF EITHER CASTING AND THE GRATE SHALL SEAT IN ITS FRAME WITHOUT ROCKING.

WALLS: WHEN USED IN PLACE OF CONCRETE, BRICK SIDE WALLS SHALL BE 8" NOMINAL THICKNESS.

PRECAST CONSTRUCTION: CONCRETE SHALL MEET THE REQUIREMENTS OF CMS 706.13. PRECAST WALLS SHALL HAVE A MINIMUM THICKNESS OF 6" AND REINFORCING SHALL BE SUFFICIENT TO PERMIT SHIPPING AND PLACEMENT WITHOUT DAMAGE.

OPENINGS: PIPE OPENINGS SHALL BE THE O.D. OF THE PIPE BEING SUPPLIED PLUS 2" WHEN FABRICATED OR FIELD CUT. FILL ANY VOIDS PER CMS 601.

DEPTH: STRUCTURE SHALL BE CONSTRUCTED SO THAT THE MINIMUM DEPTH FROM T/C TO TOP OF CONDUIT IS FOUR FEET (4').

DOWELS: FOUR 1"X18" DOWELS ARE REQUIRED FOR CONCRETE GUTTER BLOCKOUT.

REFER TO CMS 451.08 B AND 709.13 FOR DOWEL SPECIFICATIONS.

APPLIES TO A-4 CATCH BASIN ONLY.

BLOCKOUTS: BLOCKOUTS SHALL BE PAVED WITH CLASS C CONCRETE IN CURB AND GUTTER AND PAID FOR AS A PART OF THE CURB AND GUTTER WITH NO DEDUCTION IN CURB AND GUTTER QUANITITIES BECAUSE OF THE CASTINGS.

STEPS: STEPS SHALL BE PROVIDED WHERE THE DEPTH EXCEEDS 6' AND SHALL MEET THE MATERIAL REQUIREMENTS OF ITEM 604 OF THE ODOT CONSTRUCTION AND MATERIAL SPECIFICATIONS.

PAYMENT: ALL MATERIALS AND LABOR, INCLUDING EXCAVATION AND BACKFILLING, SHALL BE PAID FOR UNDER ITEM 604 TYPE A-2 OR A-4 CATCH BASIN.

TYPE A-2/A-4 CATCH BASIN

LUCAS COUNTY STANDARD CONSTRUCTION DRAWINGS

CB-2

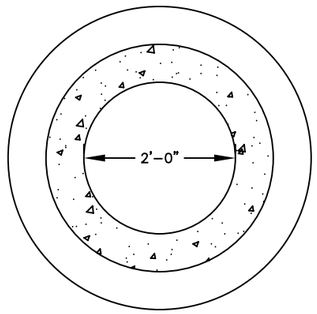

SECTION A-A

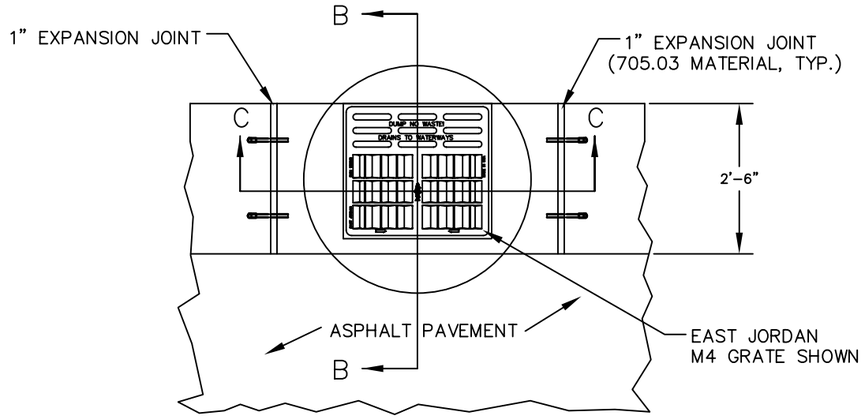

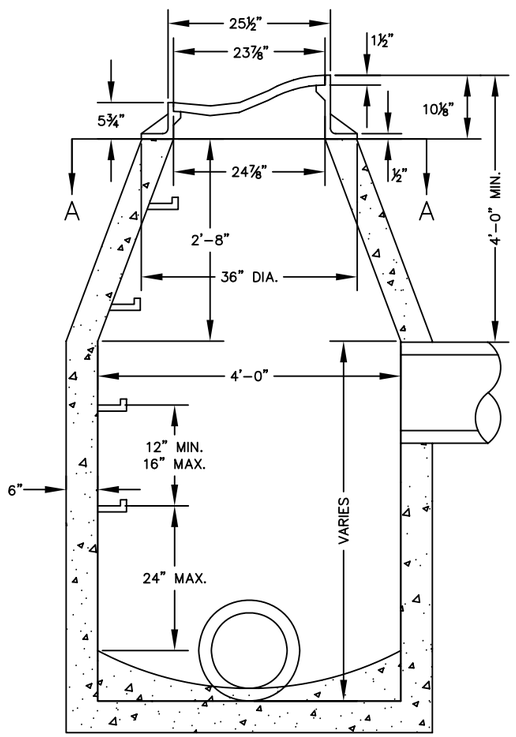

SECTIONAL ELEVATION

CURB INLET CASTING

NEENAH R-3501-L2,
EAST JORDAN 7495Z2 WITH
M1, M2 OR M4 GRATE, AS
SHOWN OR EQUAL

NOTE: THIS CASTING MUST BE USED WITH "TYPE F" MOUNTABLE CURB.

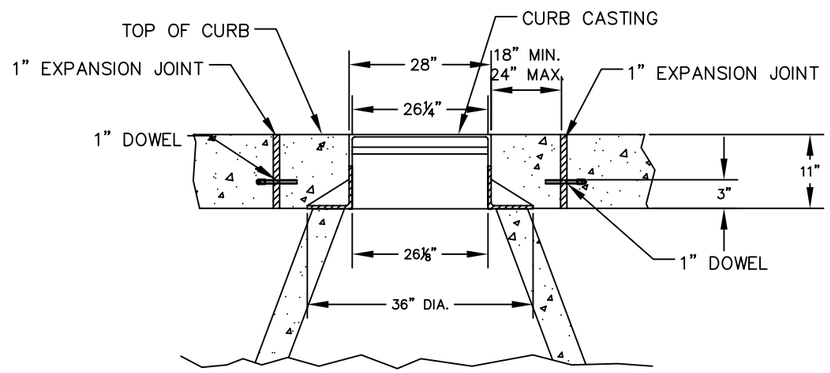

SECTION C-C

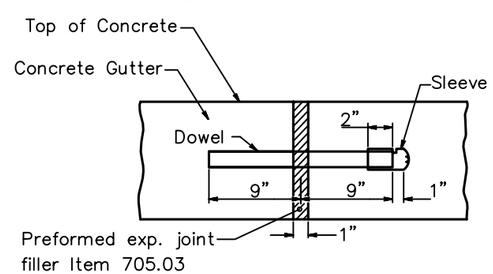

SECTION THROUGH EXP. JOINT

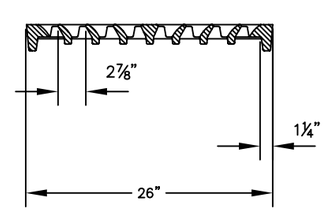

SECTION C-C

NOTES

GRATE: THE BI-DIRECTIONAL FLOW GRATE SHALL BE PROVIDED UNLESS THE CATCH BASIN IS LOCATED IN A FLOW THROUGH GUTTER. IN A FLOW THROUGH GUTTER A ONE DIRECTIONAL FLOW GRATE SHALL BE PROVIDED.

CASTINGS: THE DESIGN SHALL BE ESSENTIALLY THE SAME AND EQUALLY AS STRONG AS THOSE SHOWN.

THE FOLLOWING TEXT SHALL BE CAST INTO THE TOP OF THE CURB CASTING:

"DUMP NO WASTE" AND **"DRAINS TO WATERWAY"**

TEXT SHALL BE PRINTED IN BOLD, CAPITAL LETTERS WITH A MINIMUM HEIGHT OF ¾". "WATERWAY" MAY BE SUBSTITUTED WITH "STREAM","RIVER","LAKE", ETC. ACTUAL PLACEMENT AND LOGO MAY VARY PER MANUFACTURER.

BEARING AREAS: THE FRAME AND GRATE SHALL BE SO FITTED AND FINISHED AS TO PROVIDE A FIRM AND EVEN SEAT. NO PROJECTIONS SHALL EXIST ON BEARING AREAS OF EITHER CASTING AND THE GRATE SHALL SEAT IN ITS FRAME WITHOUT ROCKING.

WALLS: WHEN USED IN PLACE OF CONCRETE, BRICK SIDE WALLS SHALL BE 8" NOMINAL THICKNESS.

PRECAST CONSTRUCTION: CONCRETE SHALL MEET THE REQUIREMENTS OF CMS 706.13. PRECAST WALLS SHALL HAVE A MINIMUM THICKNESS OF 6" AND REINFORCING SHALL BE SUFFICIENT TO PERMIT SHIPPING AND PLACEMENT WITHOUT DAMAGE.

OPENINGS: PIPE OPENINGS SHALL BE THE O.D. OF THE PIPE BEING SUPPLIED PLUS 2" WHEN FABRICATED OR FIELD CUT. FILL ANY VOIDS PER CMS 601.

DEPTH: STRUCTURE SHALL BE CONSTRUCTED SO THAT THE MINIMUM DEPTH FROM T/C TO TOP OF CONDUIT IS FOUR FEET (4').

DOWELS: FOUR 1"X18" DOWELS ARE REQUIRED FOR CONCRETE GUTTER BLOCKOUT.

REFER TO CMS 451.08 B AND 709.13 FOR DOWEL SPECIFICATIONS.

BLOCKOUTS: BLOCKOUTS SHALL BE PAVED WITH CLASS C CONCRETE IN CURB AND GUTTER AND PAID FOR AS A PART OF THE CURB AND GUTTER WITH NO DEDUCTION IN CURB AND GUTTER QUANITITIES BECAUSE OF THE CASTINGS.

STEPS: STEPS SHALL BE PROVIDED WHERE THE DEPTH EXCEEDS 6' AND SHALL MEET THE REQUIREMENTS OF ITEM 604 OF THE ODOT CONSTRUCTION AND MATERIAL SPECIFICATIONS.

PAYMENT: ALL MATERIALS AND LABOR, INCLUDING EXCAVATION AND BACKFILLING, SHALL BE PAID FOR UNDER ITEM 604 TYPE A-3 CATCH BASIN.

GRATE

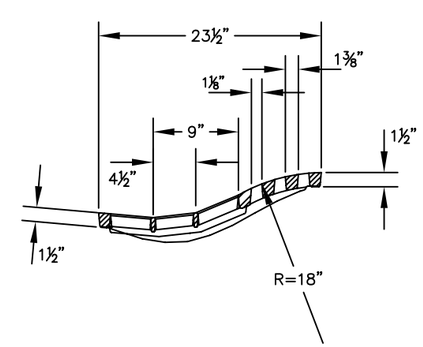

SECTION B-B

03/06
04/17/07

TYPE A-3 CATCH BASIN

LUCAS COUNTY STANDARD
CONSTRUCTION DRAWINGS

CB-3

FONTS: TYPE 1

ROAD NAME:	HIGHWAY, TYPE B
ROAD EXTENSION:	HIGHWAY, TYPE B
ROAD NUMBER:	HIGHWAY, TYPE B

FONTS: TYPE 2 & 3

ROAD NAME:	HIGHWAY, TYPE C
ROAD EXTENSION:	HIGHWAY, TYPE C
ROAD NUMBER:	HIGHWAY, TYPE C

COLORS:

LEGEND:	WHITE
BACKGROUND:	GREEN
BORDER:	WHITE

NOTES

1. TYPE 1 SIGNS ARE TO BE USED WHEN AT LEAST ONE APPROACH TO THE INTERSECTION HAS A SPEED LIMIT OF 35 MPH OR GREATER AND AT LEAST 1 INTERSECTING ROAD HAS 4 OR MORE LANES OF TRAVEL.
2. TYPE 2 SIGNS ARE TO BE USED WHEN AT LEAST ONE APPROACH TO THE INTERSECTION HAS A SPEED LIMIT OF 35 MPH OR GREATER AND THE INTERSECTING ROADS HAVE 2–3 LANES OF TRAVEL.
3. TYPE 3 SIGNS ARE TO BE USED WHEN ALL APPROACHES OF TRAFFIC TO THE INTERSECTION HAVE A SPEED LIMIT LESS THAN 35 MPH AND ALL ROADS HAVE LESS THAN 4 LANES OF TRAVEL.
4. HORIZONTAL SPACING BETWEEN OBJECTS MAY VARY DEPENDING ON THE REQUIRED WIDTH OF THE SIGN, BUT SHOULD NOT BE LESS THAN 1–INCH.
5. ALL TEXT KERNING SHOULD REMAIN AS CLOSE TO 100% AS POSSIBLE, BUT MAY BE REDUCED TO A MINIMUM OF 60% OF ORIGINAL TEXT KERNING.
6. ALL UNITS OF MEASURE ARE IN INCHES, UNLESS OTHERWISE NOTED.
7. WHEN A SIGN REQUIRES TWO ROWS OF TEXT, BOTH TEXT OBJECTS SHOULD BE "LEFT ALIGNED" RELATIVE TO EACH OTHER.
8. WHEN A SIGN REQUIRES TWO ROWS OF TEXT, THE TEXT OBJECT WITH THE GREATER LENGTH IS TO BE POSITIONED SO THAT THERE IS EQUAL DISTANCE ON EITHER SIDE OF THE TEXT OBJECT.
9. USE TYPE G REFLECTIVE SHEETING COMPLYING WITH ODOT CMS 730.19 FOR WHITE PORTIONS OF FACE ON SIGNS. USE GREEN EC FILM COMPLYING WITH ODOT CMS 730.23 FOR GREEN PORTIONS OF FACE ON SIGNS.
10. REFERENCE THE LUCAS COUNTY ENGINEER'S STANDARD CONSTRUCTION DRAWINGS FOR SIGN BLANK DETAIL.

TYPE 1

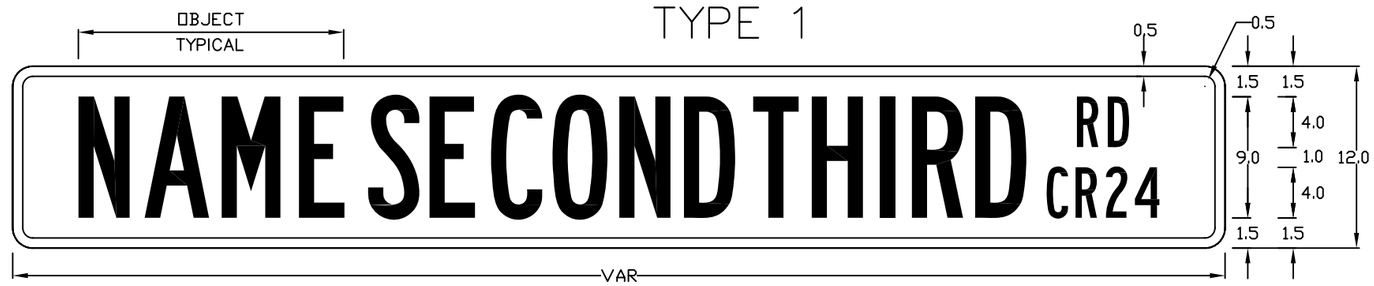

TYPE 2

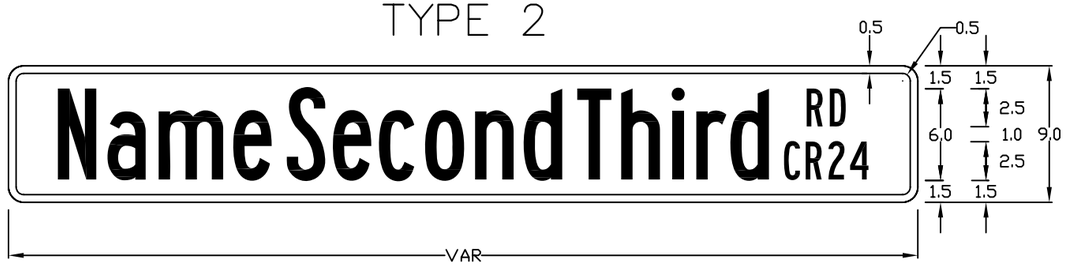

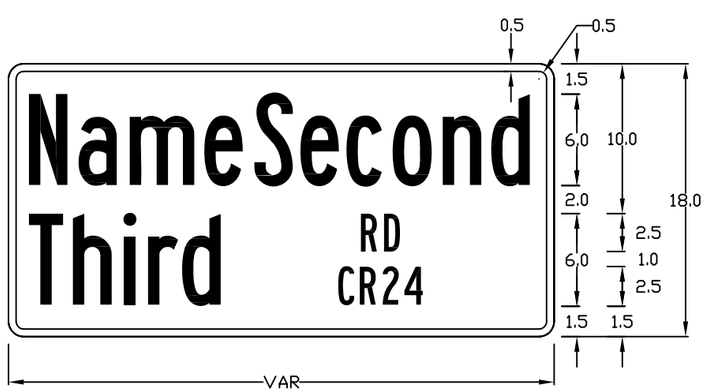

TYPE 3

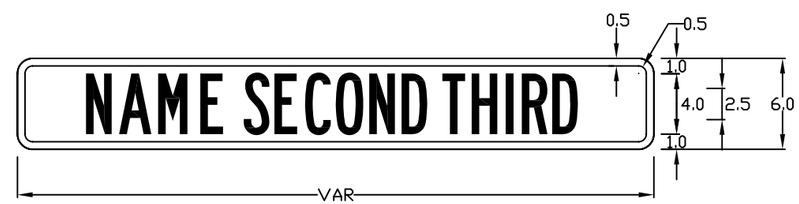

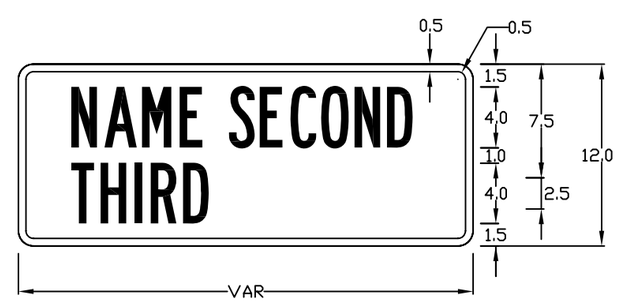

03/06
04/17/07

ROAD NAME SIGN DETAIL

LUCAS COUNTY STANDARD CONSTRUCTION DRAWINGS

TR–1

FONTS:

ROAD NAME:	6" TYPE C
ROAD EXTENSION:	6" TYPE C

NOTES

1. ADVANCED ROAD NAME SIGNS ARE TO BE INSTALLED WITH ADVANCED LANE CONTROL SIGNS AT A LOCATION CONSISTENT WITH THE OHIO MANUAL OF UNIFORM TRAFFIC CONTROL DEVICES.
2. SIGN WIDTH SHOULD MATCH THE WIDTH OF THE ADVANCED LANE CONTROL SIGN IT IS TO BE INSTALLED ABOVE. THIS MAY REQUIRE REDUCING OBJECT SPACING OR TEXT KERNING.
3. THE ROAD EXTENSION ABBREVIATION SHOULD BE INCLUDED ON THE SIGN, BUT MAY BE EXCLUDED WHEN SPACE IS RESTRICTED BY THE SIGN WIDTH AND INCLUSION OF THE ROAD EXTENSION ABBREVIATION WOULD REQUIRE A REDUCTION IN FONT SIZE.
4. ALL ROAD EXTENSION ABBREVIATIONS SHALL BE CONSISTENT WITH THE OHIO MANUAL OF UNIFORM TRAFFIC CONTROL DEVICES.
5. HORIZONTAL SPACING BETWEEN OBJECTS MAY VARY DEPENDING ON THE REQUIRED WIDTH OF THE SIGN, BUT SHOULD NOT BE LESS THAN 1-INCH.
6. ALL TEXT KERNING SHOULD REMAIN AS CLOSE TO 100% AS POSSIBLE, BUT MAY BE REDUCED TO A MINIMUM OF 60% OF ORIGINAL TEXT KERNING.
7. ALL UNITS OF MEASURE ARE IN INCHES, UNLESS OTHERWISE NOTED.
8. WHEN A SIGN REQUIRES TWO ROWS OF TEXT, BOTH TEXT OBJECTS SHOULD BE "LEFT ALIGNED" RELATIVE TO EACH OTHER.
9. THE TEXT OBJECT IS TO BE POSITIONED SO THAT THERE IS AN EQUAL DISTANCE (X) ON EITHER SIDE OF THE TEXT OBJECT.
10. WHEN A SIGN REQUIRES TWO ROWS OF TEXT, THE TEXT OBJECT WITH THE GREATER LENGTH IS TO BE POSITIONED SO THAT THERE IS EQUAL DISTANCE ON EITHER SIDE OF THE TEXT OBJECT.
11. USE TYPE G REFLECTIVE SHEETING COMPLYING WITH ODOT CMS 730.19 FOR WHITE PORTIONS OF FACE ON SIGNS. USE GREEN EC FILM COMPLYING WITH ODOT CMS 730.23 FOR GREEN PORTIONS OF FACE ON SIGNS.
12. REFERENCE THE LUCAS COUNTY ENGINEER'S STANDARD CONSTRUCTION DRAWINGS FOR SIGN BLANK DETAIL.

COLORS: LEGEND —WHITE
BACKGROUND —GREEN
BORDER —WHITE

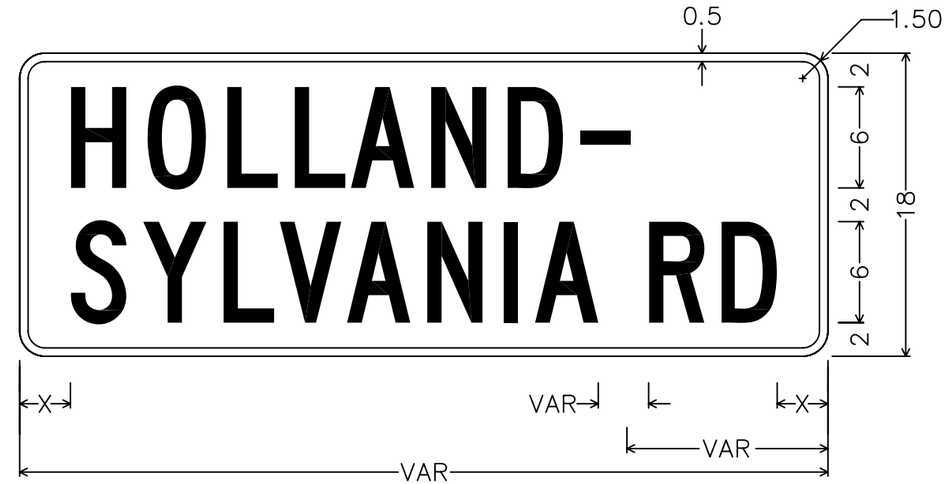

COLORS: LEGEND —WHITE
BACKGROUND —GREEN
BORDER —WHITE

ADVANCED ROAD NAME SIGN

LUCAS COUNTY STANDARD CONSTRUCTION DRAWINGS

TR-2

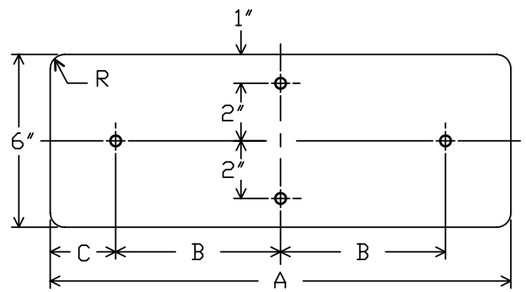

A	B	C	R	GAUGE	SQ.FT.
18	4.5	4.5	1.00	0.080	0.750
24	5.5	6.5	1.00	0.080	1.000
30	8.5	6.5	1.00	0.080	1.250
36	12	6	1.00	0.080	1.500
42	12	9	1.00	0.080	1.750

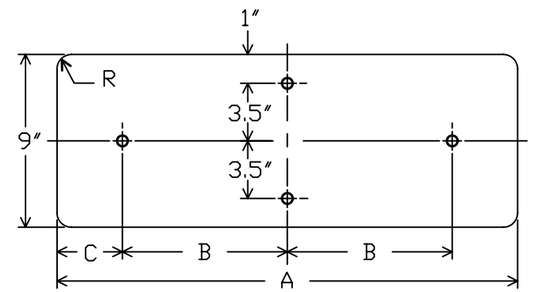

A	B	C	R	GAUGE	SQ.FT.
24	5.5	6.5	1.50	0.080	1.500
30	8.5	6.5	1.50	0.080	1.875
36	12	6	1.50	0.080	2.250
42	12	9	1.50	0.080	2.625
48	15	9	1.50	0.080	3.000

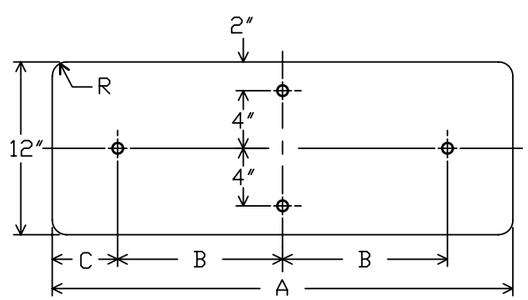

A	B	C	R	GAUGE	SQ.FT.
24	5.5	6.5	1.50	0.080	2.000
30	8.5	6.5	1.50	0.080	2.500
36	12	6	1.50	0.080	3.000
42	12	9	1.50	0.080	3.500
48	15	9	1.50	0.080	4.000

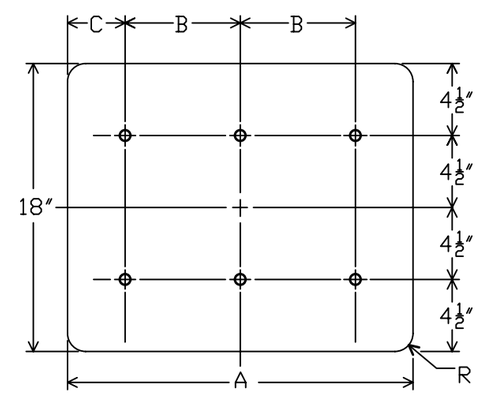

A	B	C	R	GAUGE	SQ.FT.
24	5.5	6.5	1.50	0.080	3.00
30	8.5	6.5	1.50	0.080	3.75
36	12	6	1.50	0.080	4.50
42	12	9	1.50	0.080	5.25
48	15	9	1.50	0.080	6.00

NOTES

1. FOR EACH DETAIL SHOWN, ALL DIMENSIONS ARE IN INCHES UNLESS OTHERWISE NOTED.
2. ALL BOLT HOLES SHALL BE 3/8" IN DIAMETER, AND MAY BE DRILLED OR PUNCHED TO FINISHED SIZE.
3. DIMENSIONS BETWEEN BOLT HOLES SHALL BE TO TOLERANCE OF +/– 1/32".
4. ALL RADIUS CORNERS ARE 1.5".
5. ALL ALUMINUM SHEETS AND PLATES SHALL BE IN ACCORDANCE WITH 2005 OHIO DEPARTMENT OF TRANSPORTATION CONSTRUCTION AND MATERIAL SPECIFICATIONS. (1/1/05)

730.11 ALUMINUM SHEET AND PLATE.

FURNISH SHEETS FOR EXTRUSHEET PANELS ACCORDING TO ASTM B 209 (B 209M), 3003–H18, OR 5052–H38. FURNISH SHEETS FOR FLAT SHEET AND OVERLAY SIGNS, ACCORDING TO ASTM B 209 (B 209M), 3004–H38, 5052–H38, OR 6061–T6. FURNISH PLATES FOR SIGN SUPPORT STRUCTURES ACCORDING TO ASTM B 209 (B 209M), 6061–T6.

SIGN BLANK DETAIL

LUCAS COUNTY STANDARD CONSTRUCTION DRAWINGS

TR–3

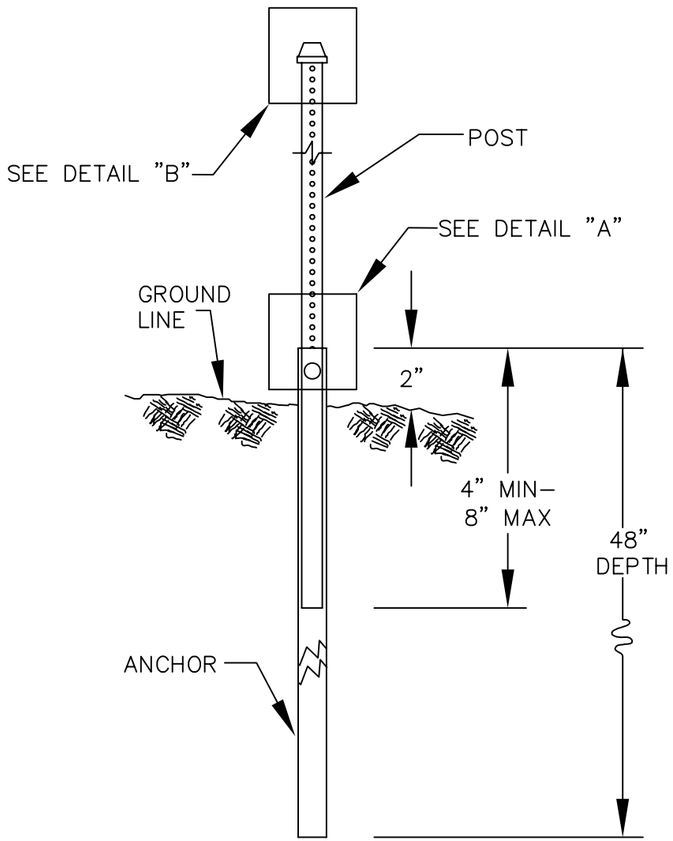

TYPICAL SQUARE POST ANCHOR BASE INSTALLATION

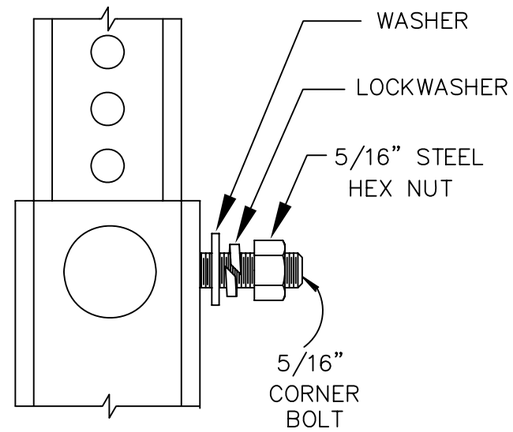

DETAIL "A"

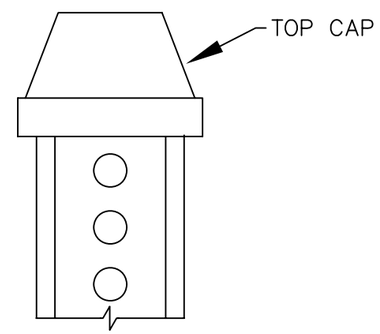

DETAIL "B"

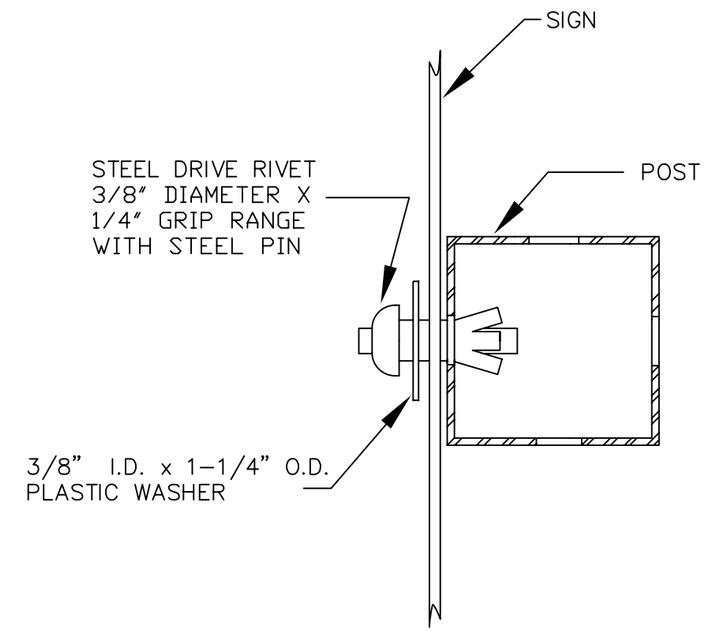

SQUARE POST
SIGN ATTACHMENT DETAIL

POST NO.	TYPE	POST DIMENSIONS (IN)			ANCHOR DIMENSIONS (IN)			NUMBER OF POSTS PERMITTED IN SEVEN FOOT PATH IN EXPOSED LOCATIONS
		A	B	C	A	B	C	
2	S	1.750	1.750	0.083	2.000	2.000	0.105	2
3	S	2.000	2.000	0.083	2.250	2.250	0.105	2
4	S	2.500	2.500	0.105	3.000	3.000	0.188	1

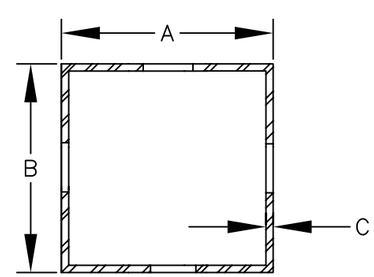

TYPE S

NOTES:

1. USE OF ANCHOR BASE IS REQUIRED IN LIEU OF SINGLE POST INSTALLATION.
2. ANCHOR SQUARE POST MAY HAVE DIE–CUT KNOCKOUTS OR OPEN HOLES.
3. SQUARE POST ABOVE GROUND LEVEL SHALL BE KNOCKOUT TYPE.
4. ITEMS PROVIDED SHALL COMPLY WITH ODOT CONSTRUCTION AND MATERIALS SPECIFICATIONS 630.

YIELDING POST

LUCAS COUNTY STANDARD CONSTRUCTION DRAWINGS

TR–4

ROADSIDE SIGN
RURAL DISTRICT

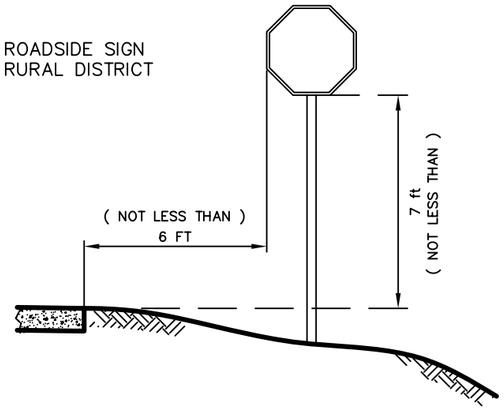

ROADSIDE SIGN
RURAL DISTRICT

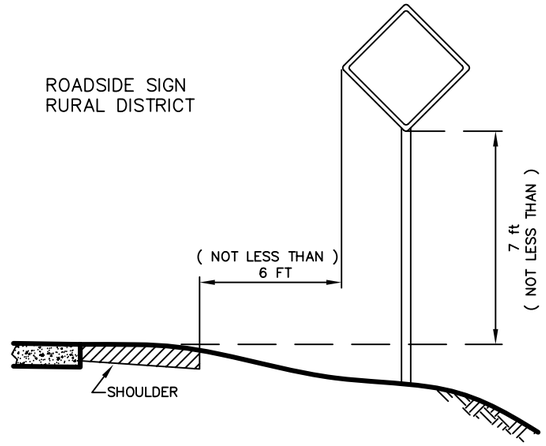

ROADSIDE SIGN
BUSINESS OR
RESIDENTIAL DISTRICT

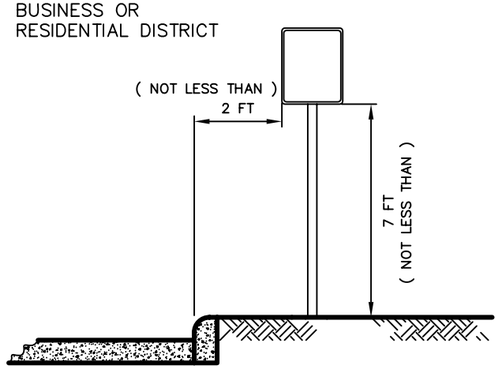

WARNING SIGN WITH
ADVISORY SPEED PLAQUE
RURAL DISTRICT

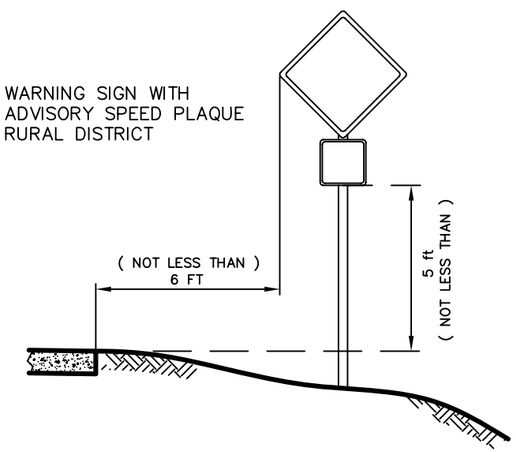

OVERHEAD
MOUNTING

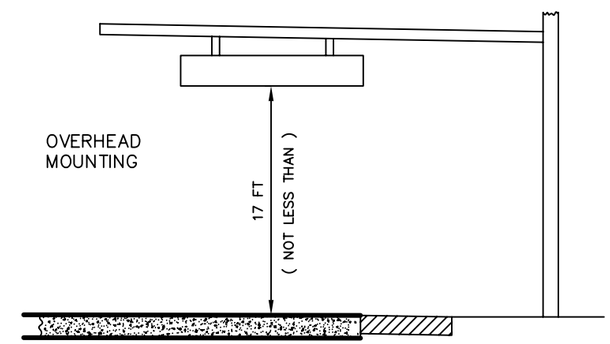

ROADSIDE ASSEMBLY
RURAL DISTRICT

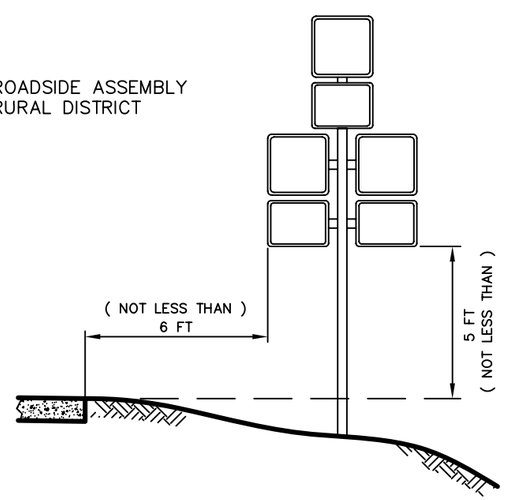

WARNING SIGN
ON ISLAND
IN THE LINE OF TRAFFIC

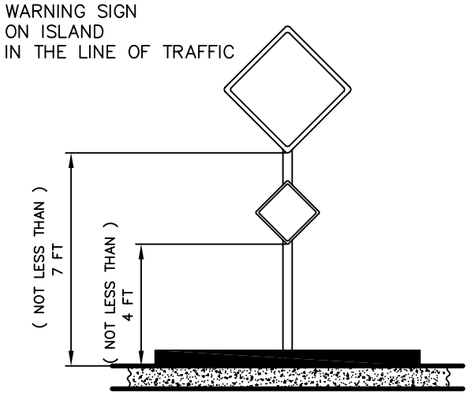

03/06

TYPICAL SIGN LOCATION DETAIL

LUCAS COUNTY STANDARD
CONSTRUCTION DRAWINGS

TR–5

* NOTE: FOR USE WITH 4'–6" HIGH SIGNS SHOWN AND STREET SIGNS IF REQUIRED WHEN USING FOR STREET SIGN ATTACH, LENGTH TO BE SPECIFIED BY H

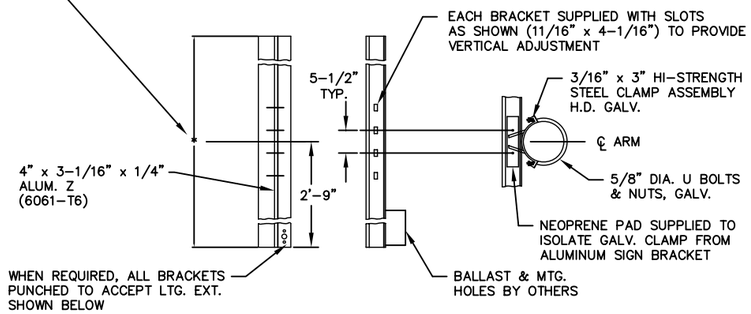

SIGN BRACKET DETAIL

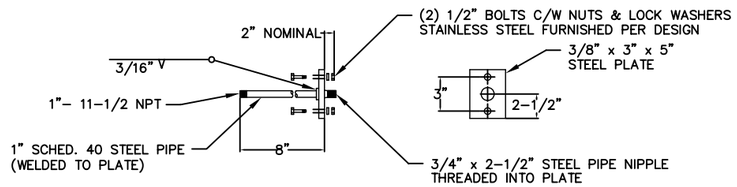

NOTE: PLASTIC THREAD PROTECTORS FURNISHED FOR ALL EXPOSED THREADS

NOTE: EXTENSION TO BE HOT DIP GALV. AFTER FABRICATION

DESIGN NO.	"B"	EFFECTIVE SIGN HEIGHT
B–29	2'–9"	3' – 5'
B–33	3'–3"	5' – 6'–6"
B–43	4'–3"	7' – 10'

SIGN LTG. EXTENSION DETAIL

DETAIL A

SIGN BRACKET AND LIGHTING EXTENSION DETAIL

NOTES:

(1) SIGN BRACKETS FURNISHED PER DESIGN BASED ON LENGTH
(2) R TO BE SPECIFIED
(3) TO BE USED ON POLE WHERE NO CONNECTION IS PROVIDED FOR STREET NAME SIGN

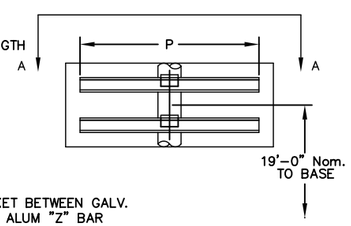

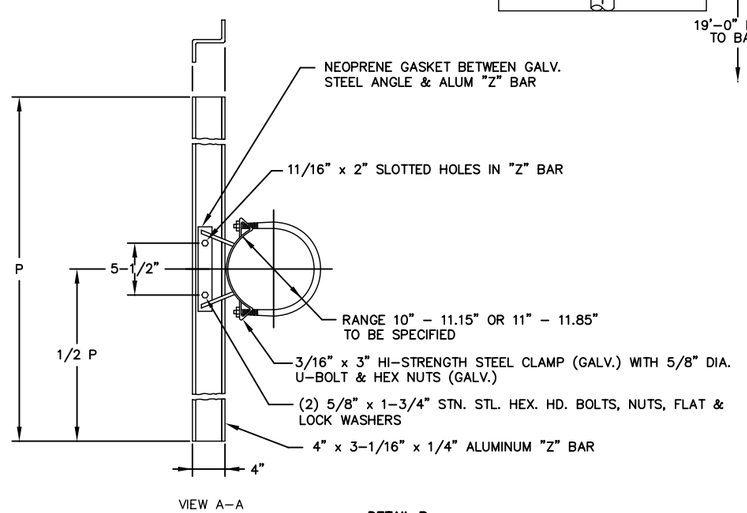

VIEW A–A

DETAIL B

SIGN BRACKET ASSEMBLY

DESIGN NO'S.				POLE	TRAFFIC ARM								FOUND. TYPE
33'–0" POLE		24'–0" POLE		GA. & DIAMETER									
STREET SIGN ATTACH.		STREET SIGN ATTACH.			ARM SIZES		TYPICAL DIMENSIONS					RISE	
WITH	WITHOUT	WITH	WITHOUT		SECTION A	SECTION B	C	D	E	F	G	MIN.	MAX.	
85 LW	85 LO	85 SW	85 SO	7 & 7E – 13"	7&7E–9.0"x4.24"x34'–0"		34'	32'–0"	20'–6"	8'–6"		11"	22"	M
95 LW	95 LO	95 SW	95 SO	7 & 7E – 13"	7&7E–9.0"x3.96"x36'–0"		36'	34'–0"	22'–6"	10'–6"		11"	23"	M
105 LW	105 LO	105 SW	105 SO	OE – 14"	7&7E–10.0"x6.5"x25'–0"	7E– 7.0"x5.04"x14'–0"	38'	36'–0"	24'–6"	12'–6"		12"	24"	P
115 LW	115 LO	115 SW	115 SO	OE – 14"	7&7E–10.0"x6.5"x25'–0"	7E– 7.0"x4.76"x16'–0"	40'	38'–0"	26'–6"	14'–6"		13"	25"	P
125 LW	125 LO	125 SW	125 SO	OE – 14"	7&7E–10.0"x6.5"x25'–0"	7E– 7.0"x4.48"x18'–0"	42'	40'–0"	28'–6"	16'–6"		12"	28"	P
135 LW	135 LO	135 SW	135 SO	OE – 14"	7&7E–10.0"x6.5"x25'–0"	7E– 7.0"x4.48"x20'–0"	44'	42'–0"	30'–6"	18'–6"		13"	29"	P

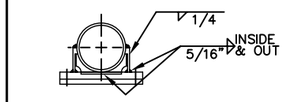

VIEW X – X

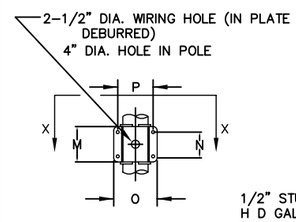

TRAFFIC ARM ATTACHMENT

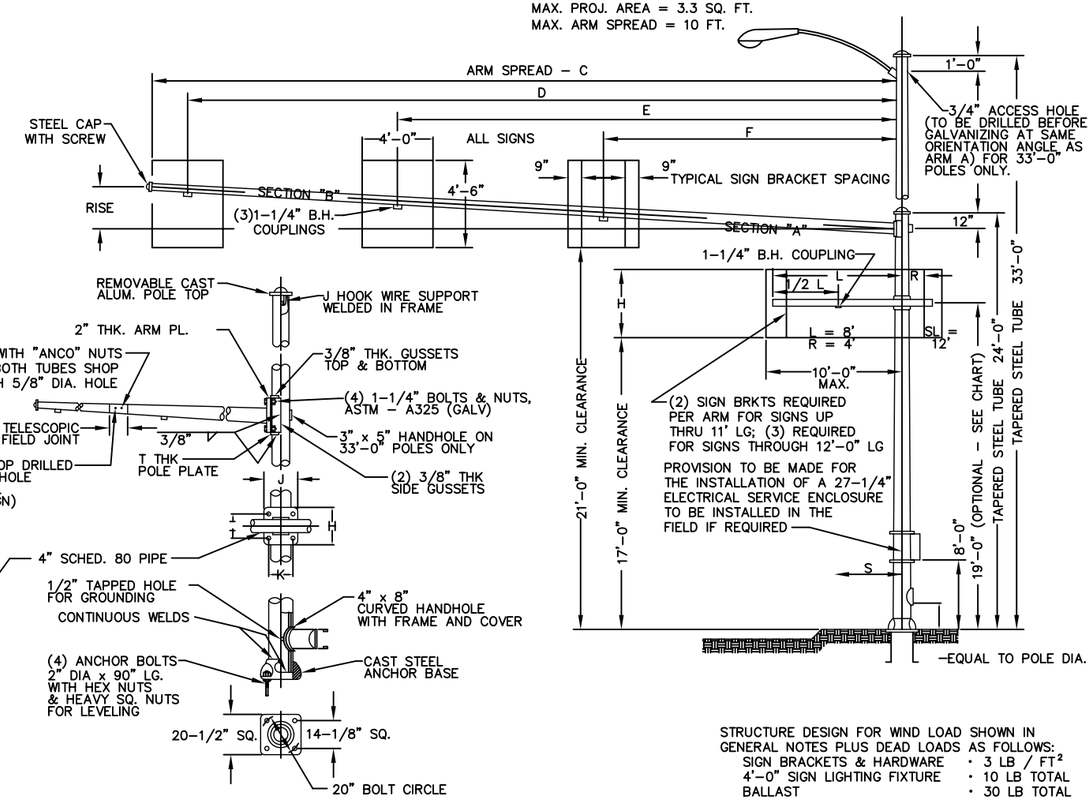

STREET SIGN ATTACHMENT OPTIONAL – SEE CHART

STRUCTURE DESIGN FOR WIND LOAD SHOWN IN GENERAL NOTES PLUS DEAD LOADS AS FOLLOWS:

SIGN BRACKETS & HARDWARE	• 3 LB / FT^2
4'–0" SIGN LIGHTING FIXTURE	• 10 LB TOTAL
BALLAST	• 30 LB TOTAL

GENERAL NOTES:

1. SIGN LIGHTING EXTENSION AND SIGN BRACKET DETAILS SHOWN ON DETAIL A
2. STRUCTURES ARE DESIGNED TO SUPPORT SIGN SIZES SHOWN PLUS LUMINAIRE & BALLAST WEIGHTS INDICATED IN ACCORDANCE WITH SPECIFICATION FOR DESIGN AND CONSTRUCTION OF STRUCTURAL SUPPORTS FOR HIGHWAY SIGNS BY AASHO (1961) FOR A WIND PRESSURE OF 35 P.S.F.
3. L, R, SIGN HEIGHT (H), AND STREET SIGN LIGHTING BRACKET EXTENSION Z DIMENSIONS TO BE SPECIFIED *
4. POLE DESIGNATIONS SHALL BE AS FOLLOWS, FOR EXAMPLE:
   95 LW B–33
   95 LW = POLE DESIGN NO. 95_W
   B–33 = 3'–3" B DIMENSIONS FOR ALL SIGN LIGHTING BRACKET EXTENSIONS
5. THE BID ITEM FOR EACH CANTILEVER SIGN SUPPORT SHALL INCLUDE THE MAST ARM, AN UPRIGHT POLE SHAFT, AN ANCHOR BASE, POLE SHAFT EXTENSION FOR A LUMINAIRE MOUNTING (WHEN REQUIRED), FOUR ANCHOR BOLTS AND NUTS, SIGN BRACKET ASSEMBLY, (SIGN BRACKET AND CLAMPS) AND ANY OTHER HARDWARE, ATTACHMENTS, MODIFICATIONS, AND ACCESSORIES REQUIRED TO MAKE A COMPLETE INSTALLATION AS SHOWN HEREON
6. ALL UPRIGHT POLE SHAFTS AND MAST ARMS SHALL BE ROUND IN CROSS SECTION AND BE UNIFORMLY TAPERED FROM BUTT TO TIP APPROXIMATELY ONE INCH IN DIAMETER FOR EACH SEVEN LINEAL FEEET IN LENGTH (0.14 INCHES PER FOOT)
7. SEE LUCAS COUNTY ENGINEER'S STANDARD CONSTRUCTION DRAWING POLE AND PEDESTAL FOUNDATION DETAILS.
8. L + R = STREET SIGN LENGTH, (SL)

STREET SIGN ATTACHMENT								TRAFFIC ARM							
POLE DIA.	H	I	J	K				ARM DIA.	M	N	O	P	T		
7 & 7E – 13"	11"	8–1/2"	17"	14–3/8"				7 & 7E – 10"	21"	11"	19–1/2"	15–1/2"	2"		
OE – 14"	12"	9–1/2"	18"	15–3/8"				7 & 7E – 9"	19"	9"	18"	14"	1–1/4"		

CANTILEVER SIGN SUPPORT 3–LANE CONTROL

LUCAS COUNTY STANDARD CONSTRUCTION DRAWINGS

TR–6

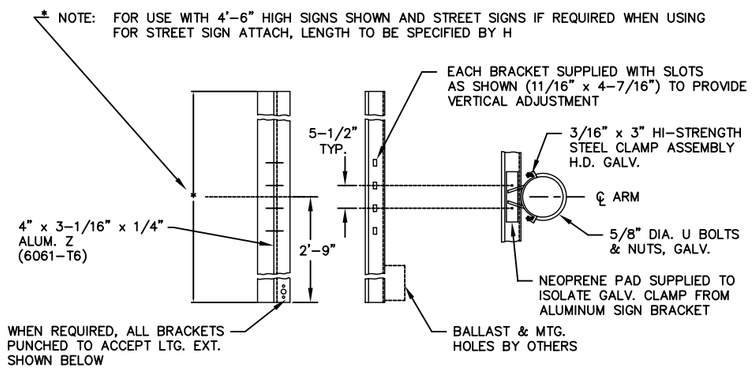

SIGN BRACKET DETAIL

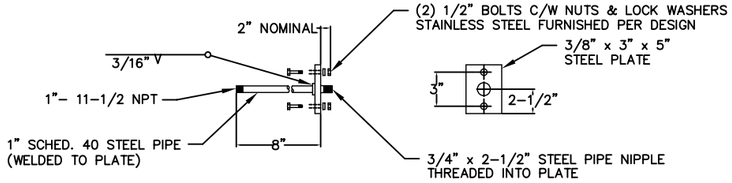

NOTE: PLASTIC THREAD PROTECTORS FURNISHED FOR ALL EXPOSED THREADS

NOTE: EXTENSION TO BE HOT DIP GALV. AFTER FABRICATION

DESIGN NO.	"B"	EFFECTIVE SIGN HEIGHT
B-29	2'-9"	3' - 5'
B-33	3'-3"	5' - 6'-6"
B-43	4'-3"	7' - 10'-6"

SIGN LTG. EXTENSION DETAIL

DETAIL A

SIGN BRACKET AND LIGHTING EXTENSION DETAIL

NOTES:
(1) SIGN BRACKETS FURNISHED PER DESIGN BASED ON LENGTH
(2) P TO BE SPECIFIED
(3) TO BE USED ON POLE WHERE NO CONNECTION IS PROVIDED FOR STREET NAME SIGN

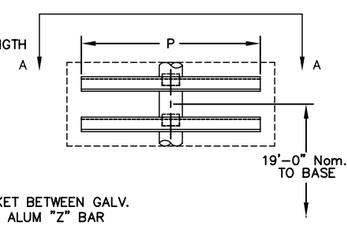

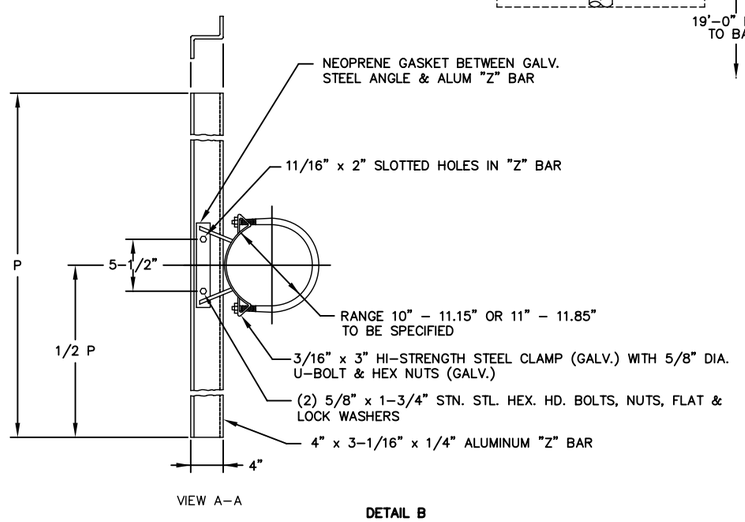

VIEW A-A

DETAIL B

SIGN BRACKET ASSEMBLY

DESIGN NO'S.				POLE	TRAFFIC ARM								FOUND. TYPE
33'-0" POLE		24'-0" POLE		GA. & DIAMETER									
STREET SIGN ATTACH.		STREET SIGN ATTACH.			ARM SIZES		TYPICAL DIMENSIONS					RISE	
WITH	WITHOUT	WITH	WITHOUT		SECTION A	SECTION B	C	D	E	F	G	MIN.	MAX.	
145 LW	145 LO	145 SW	145 SO	OE - 15"	7&7E-11.0"x7.5"x25'-0"	7E- 8.0"x4.92"x22'-0"	46'	44'	34'	22'	10'	15"	29"	Q
155 LW	155 LO	155 SW	155 SO	OE - 16.5"	7&7E-12.0"x8.47"x25'-3"	7E- 9.0"x5.64"x24'-0"	48'	46'	36'	24'	12'	16"	30"	R
165 LW	165 LO	165 SW	165 SO	7 & 7E - 16.5"	3&7E-12.0"x8.47"x25'-3"	3E- 9.14"x5.50"x26'-0"	50'	48'	38'	26'	14'	17"	32"	S
175 LW	175 LO	175 SW	175 SO	7 & 7E - 16.5"	3&7E-12.0"x8.47"x25'-3"	3E- 9.14"x5.22"x28'-0"	52'	50'	40'	28'	16'	17"	32"	S

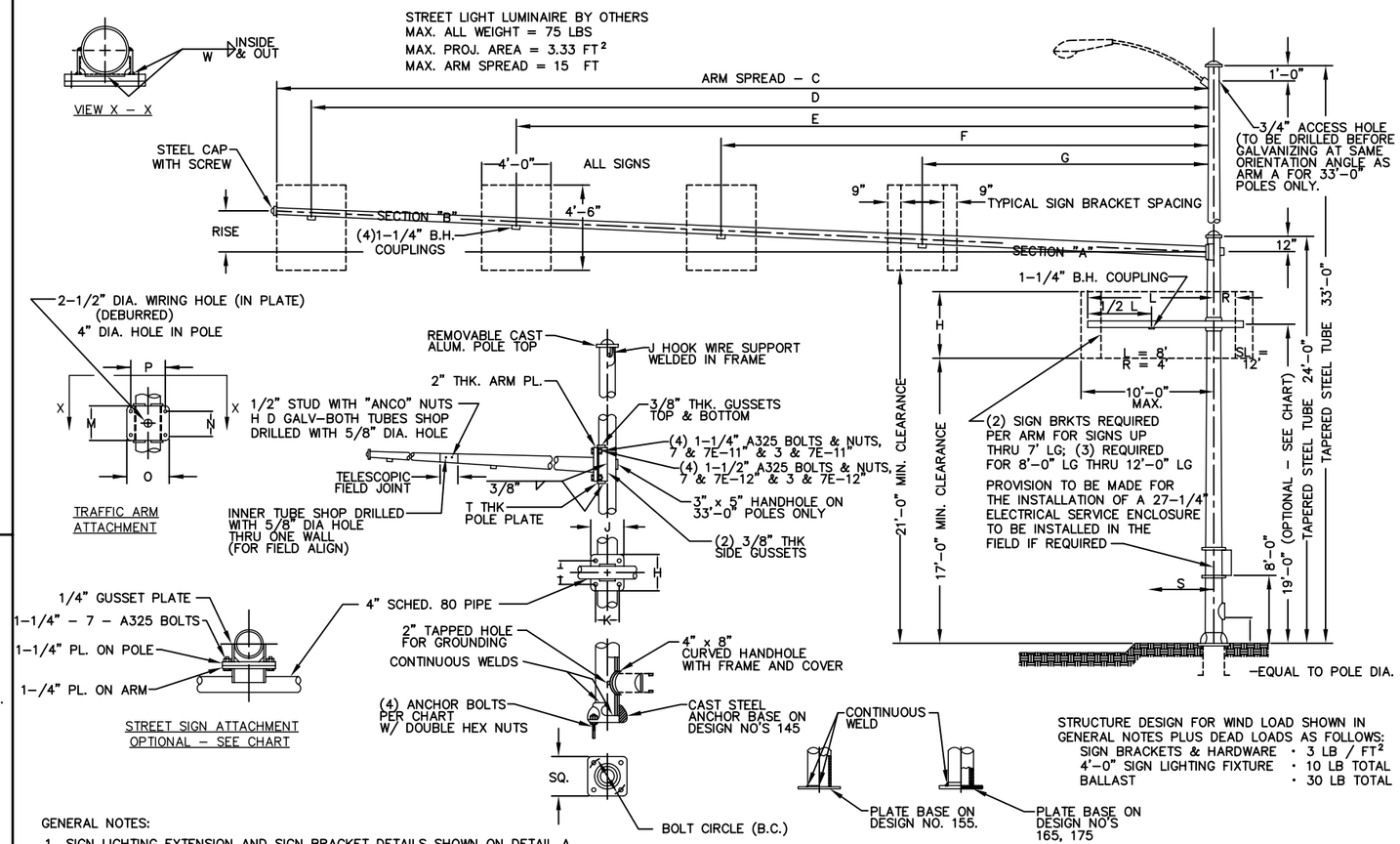

STRUCTURE DESIGN FOR WIND LOAD SHOWN IN GENERAL NOTES PLUS DEAD LOADS AS FOLLOWS:

SIGN BRACKETS & HARDWARE	• 3 LB / FT²
4'-0" SIGN LIGHTING FIXTURE	• 10 LB TOTAL
BALLAST	• 30 LB TOTAL

GENERAL NOTES:

1. SIGN LIGHTING EXTENSION AND SIGN BRACKET DETAILS SHOWN ON DETAIL A
2. STRUCTURES ARE DESIGNED TO SUPPORT SIGN SIZES SHOWN PLUS LUMINAIRE & BALLAST WEIGHTS INDICATED IN ACCORDANCE WITH SPECIFICATION FOR DESIGN AND CONSTRUCTION OF STRUCTURAL SUPPORTS FOR HIGHWAY SIGNS BY AASHO (1961) FOR A WIND PRESSURE OF 35 P.S.F.
3. L, R, SIGN HEIGHT (H), AND STREET SIGN LIGHTING BRACKET EXTENSION Z DIMENSIONS TO BE SPECIFIED *
4. POLE DESIGNATIONS SHALL BE AS FOLLOWS, FOR EXAMPLE:
   175 LW / B 33
   175 LW = POLE DESIGN NO. 175 LW
   B 33 = 3'-3" B DIMENSIONS FOR ALL SIGN LIGHTING BRACKET EXTENSIONS
5. THE BID ITEM FOR EACH CANTILEVER SIGN SUPPORT SHALL INCLUDE THE MAST ARM, AN UPRIGHT POLE SHAFT, AN ANCHOR BASE, POLE SHAFT EXTENSION FOR A LUMINAIRE MOUNTING (WHEN REQUIRED), FOUR ANCHOR BOLTS AND NUTS, SIGN BRACKET ASSEMBLY, (SIGN BRACKET AND CLAMPS) AND ANY OTHER HARDWARE, ATTACHMENTS, MODIFICATIONS, AND ACCESSORIES REQUIRED TO MAKE A COMPLETE INSTALLATION AS SHOWN HEREON
6. ALL UPRIGHT POLE SHAFTS AND MAST ARMS SHALL BE ROUND IN CROSS SECTION AND BE UNIFORMLY TAPERED FROM BUTT TO TIP APPROXIMATELY ONE INCH IN DIAMETER FOR EACH SEVEN LINEAL FEET IN LENGTH (0.14 INCHES PER FOOT)
7. SEE LUCAS COUNTY ENGINEER'S STANDARD CONSTRUCTION DRAWING POLE AND PEDESTAL FOUNDATION DETAILS.
8. L + R = STREET SIGN LENGTH, (SL)

STREET SIGN ATTACHMENT								TRAFFIC ARM							
POLE DIA.	H (in.)	I (in.)	J (in.)	K (in.)				ARM DIA.	M (in.)	N (in.)	O (in.)	P (in.)	ARM ℄ (in.)	POLE ℄ (in.)	W (in.)
OE - 15"	13	10	14-1/2	10-1/4				7 & 7E - 11"	23	12	20-1/2	16-1/2	2	2	3/8
OE - 16.5"	15	12	16-1/2	11-1/2				7 & 7E - 12"	24	13	22	18	2	2	5/16
7 & 7E - 16.5"	15	12	16-1/2	11-1/2				3 & 7E - 12"	30	13	22	18	2	2	5/16

BASE PLATE DATA			
POLE DIA.	B.C. (in.)	SQ. (in.)	ANC. BOLTS
OE - 15"	22	23	2" x 90"
OE - 16.5"	23-1/2	24-1/2	2-1/4" x 96"
7 & 7E - 16.5"	23-1/2	24-1/2	2-1/4" x 96"

LUCAS COUNTY STANDARD CONSTRUCTION DRAWINGS

CANTILEVER SIGN SUPPORT 4-LANE CONTROL

TR-7

DRAWING NOT TO SCALE

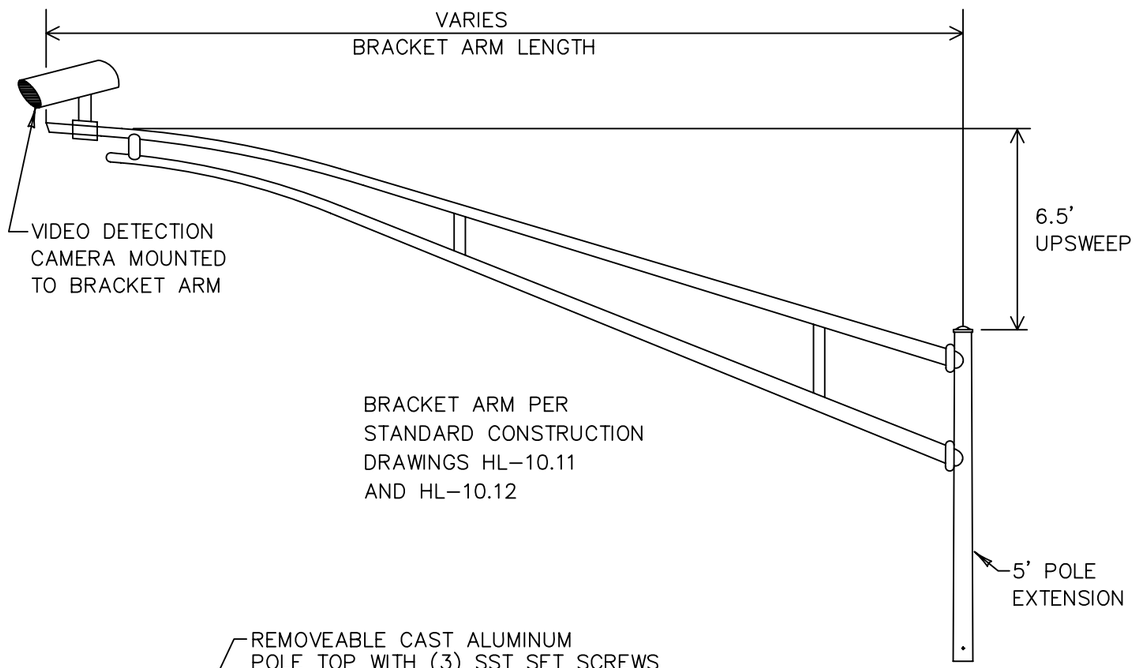

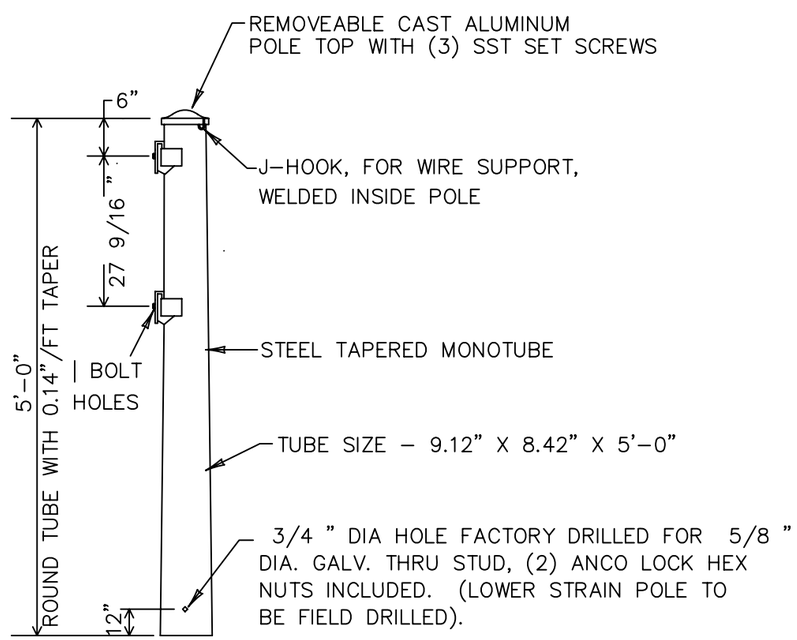

POLE EXTENSION DETAIL
FOR DESIGN NO. 10
STRAIN POLE

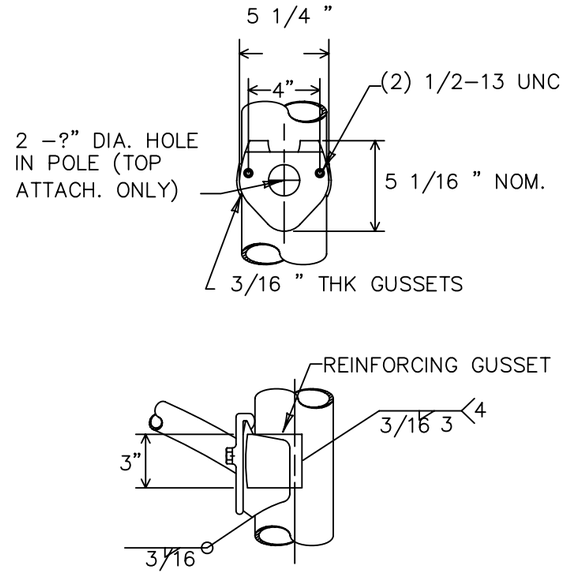

TWO BOLT ARM ATTACHMENT
POLE PLATE

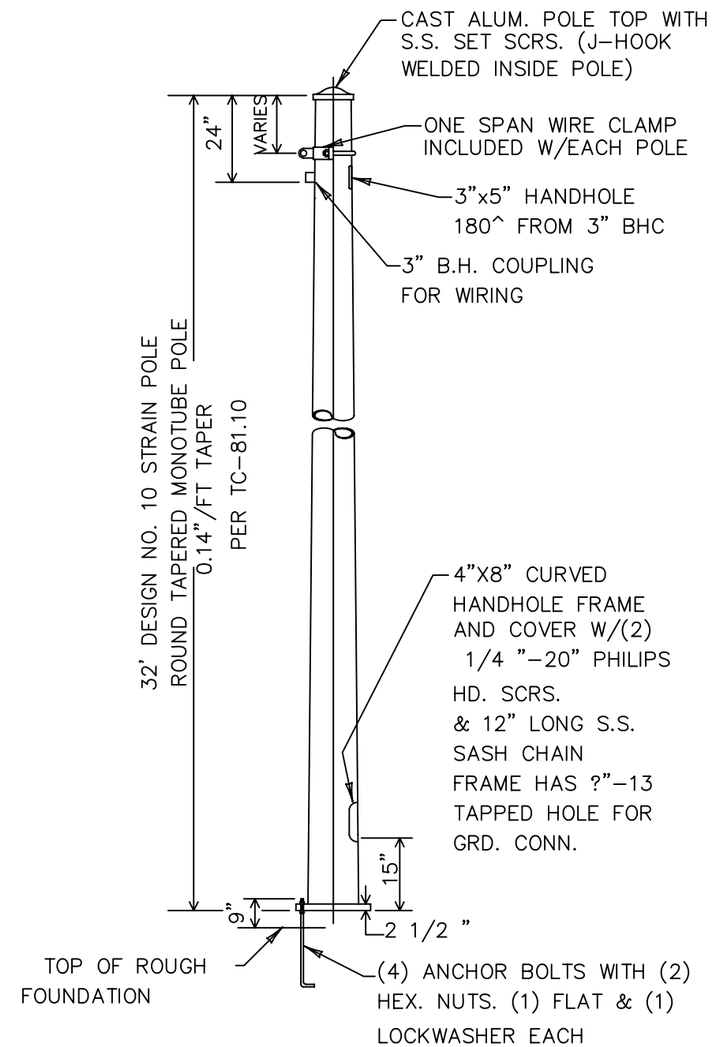

STRAIN POLE DETAIL
TC-81.10, DESIGN 10, 32', AS PER PLAN

STRAIN POLE DETAIL

LUCAS COUNTY STANDARD CONSTRUCTION DRAWINGS

TR-8

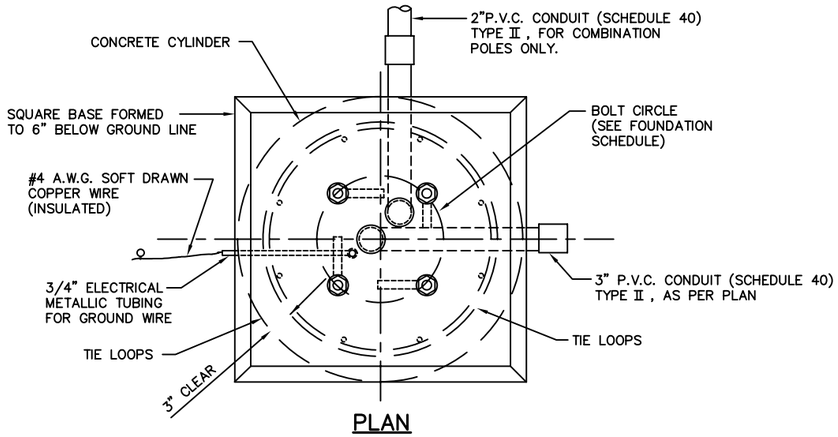

PLAN

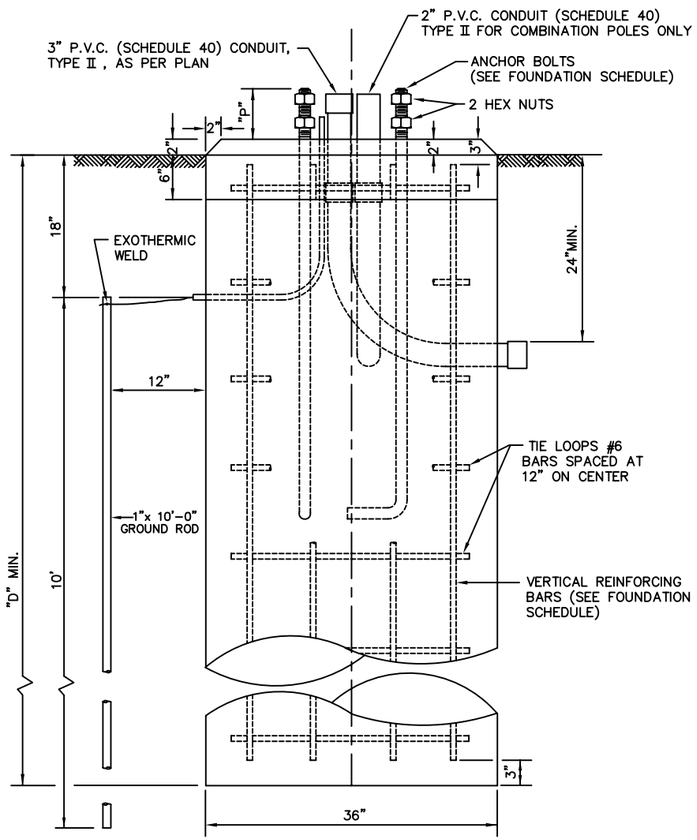

ELEVATION
ANCHOR BASE POLE FOUNDATION

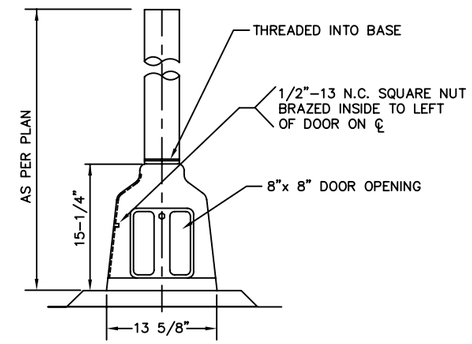

PEDESTAL

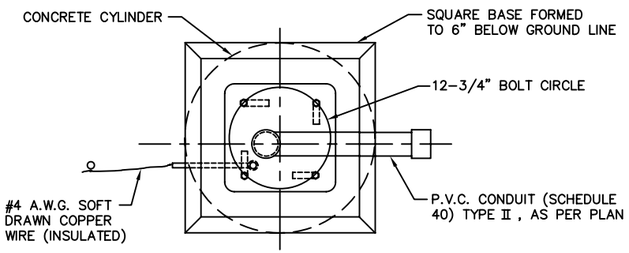

PLAN

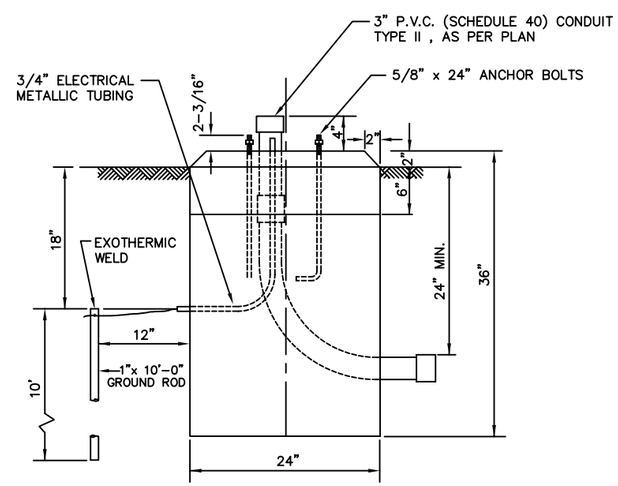

ELEVATION
ANCHOR BASE PEDESTAL FOUNDATION

NOTES:

1. CONDUIT SIZE, NUMBER AND ORIENTATION SHALL BE PROVIDED IN THE FOUNDATION AS SHOWN ON THE PLANS.

2. AN ADDITIONAL 2" P.V.C. CONDUIT (SCHEDULE 40) SHALL BE PROVIDED IN EACH COMBINATION POLE FOUNDATION FOR LIGHTIONG. IF POWER TO THE LUMAINARES IS NOT TO BE PROVIDED AS PART OF THIS PROJECT, THIS CONDUIT SHALL BE CAPPED AT BOTH ENDS.

3. MODIFICATION TO THE FOUNDATION WILL BE REQUIRED WHEN SOIL WITH LOAD BEARING CAPACITY OF LESS THAN 2000 POUNDS PER SQUARE FOOT IS ENCOUNTERED. MODIFICATION TO THE FOUNDATION IS SUBJECT TO THE APPROVAL OF THE ENGINEER.

4. FOUNDATION SHALL BE CAST-IN -PLACE WITH CLASS "C" CONCRETE. THE FOUNDATION SQUARE BASE (CAP) SHALL BE FORMED TO 6"BELOW GROUND LINE AND BE BUILT AS AN INTEGRAL PART OF FOUNDATION.

5. ALL ANCHOR BOLTS SHALL BE PROVIDED WITH STANDARD GALVANIZED STEEL HEX NUTS, LEVELING NUTS, PLAIN AND LOCKWASHERS. ANCHOR BOLTS SHALL BE SECURED DURING THE PLACEMENT OF CONCRETE TO ENSURE ACCURATE BOLT CIRCLE AND BOIT PROJECTION "P".

6. WHEN THE FOUNDATION IS PLACED ADJACENT TO A PAVED SURFACE, 1/2" PREFORMED EXPANSION JOINT MATERIAL SHALL BE PLACED BETWEEN THE FOUNDATION AND THE ADJACENT PAVED SURFACE. IN ADDITION;

FOR POLES: THE TOP OF THE FOUNDATION SHALL BE FLUSH WITH THE ADJACENT SURFACE AND SLOPED TO DRAIN.

FOR PEDESTALS: THE AREA OF CONTACT WITH THE PEDESTAL BASE SHALL BE LEVEL. IF ADJACENT PAVED SLOPE, THE REMAINDER OF THE FOUNDATION TOP SHALL BE BEVELED TO MEET THE ADJACENT SURFACE.

FOUNDATION TYPE	POLE SIZE	"D" MIN.	BOLT CIRCLE	ANCHOR BOLT SIZE	Vert. Reinf.Bars Dia.	Vert. Reinf.Bars No.	PROJECTION "P"	CONC. CU.YD
A	7GA. 9.0"	9'	12-1/2"	1-1/4"x 48"	3/4"	8	5-1/8"	2.41
B	7GA. 10.0"	10'	13-1/2"	1-1/2"x 60"	3/4"	8	5-7/8"	2.67
C	7GA. 11.0"	10'	15"	1-1/2"x 60"	3/4"	8	6-1/8"	2.67
D	7GA. 12.0"	10'	16"	1-1/2"x 60"	3/4"	8	6-1/2"	2.67
E	7GA. 13.0"	10'	18"	1-1/2"x 60"	1"	16	6-3/4"	2.67
F	3GA. 9.0"	12'	12-1/2"	1-1/2"x 60"	3/4"	8	5-1/8"	3.20
G	3GA. 10.0"	12'	13-1/2"	1-1/2"x 60"	3/4"	8	5-7/8"	3.20
H	3GA. 11.0"	12'	15"	1-3/4"x 90"	3/4"	8	6-1/8"	3.20
I	3GA. 12.0"	12'	16"	1-3/4"x 90"	3/4"	8	6-3/4"	3.20
J	3GA. 13.0"	12'	18"	1-3/4"x 90"	3/4"	16	7"	3.20
K	3GA. 14.0"	12'	20"	1-3/4"x 90"	3/4"	16	7-1/2"	3.20
L	0GA. 13.0"	13'	18"	2"x 90"	3/4"	16	7-1/4"	3.46
M	7+7GA.13.0"	13'	20"	2"x 90"	3/4"	16	7-3/4"	3.46
N	3+3GA.13.0"	13'	22"	2-1/4"x 96"	3/4"	16	8"	3.46
O	3+3GA.15.0"	15'	22"	2-1/2"x 114"	3/4"	16	8-3/4"	3.46
P	0GA. 14.0"	13'	20"	2"x 90"	3/4"	16	7-3/4"	3.46
Q	0GA. 15.0"	13'	22"	2"x 90"	3/4"	16	8-1/4"	3.46
R	0GA. 16.5"	13'	23-1/2"	2-1/4"x 96"	3/4"	16	8"	3.46
S	7+7GA.16.5"	13'	23-1/2"	2-1/4"x 96"	3/4"	16	8"	3.46

POLE & PEDESTAL FOUNDATION DETAILS

LUCAS COUNTY STANDARD CONSTRUCTION DRAWINGS

TR-9

CABINET FOUNDATION DETAIL

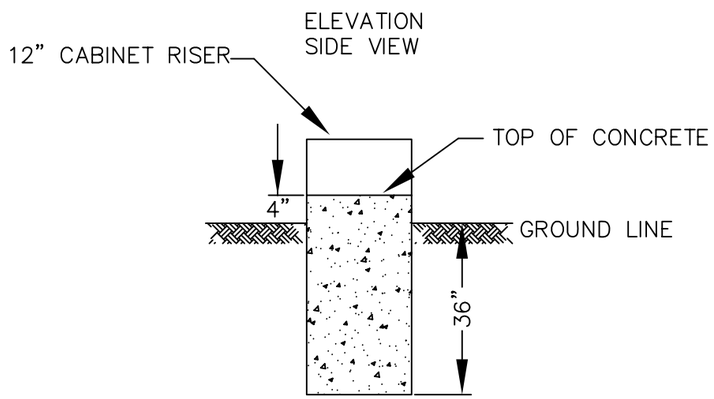

CABINET
FOUNDATION

FOUNDATION CONCRETE	WORK PAD
2.13 C.Y.	3.92 S.Y.

CABINET & WORK PAD DETAIL

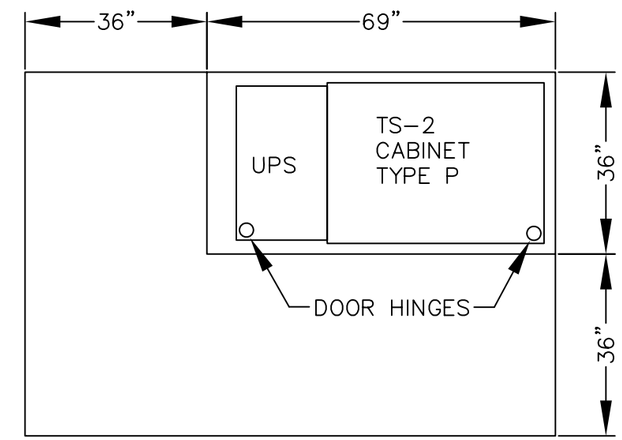

PLAN VIEW

NOTES:

1. THE SIZE OF THE UPS FOUNDATION MAY VARY BASED ON THE CABINET SIZE PROVIDED.
2. UPS FOUNDATION ELEVATION SHOULD MATCH CABINET FOUNDATION ELEVATION.
3. THE DIMENSIONS SHOWN REPLACES THAT IN ODOT SCD TC-83.20. ALL OTHER REQUIREMENTS OF SCD TC-83.20 APPLY.

SEPARATE BID ITEMS:

633 EA CABINET RISER
633 EA CONTROLLER WORK PAD
633 EA CABINET FOUNDATION
633 EA CONTROLLER MISC.: UNINTERRUPTABLE POWER SUPPLY, (UPS), 1000 WATT
633 EA CONTROLLER UNIT, TYPE TS2/A1, WITH CABINET, TYPE TS2, AS PER PLAN

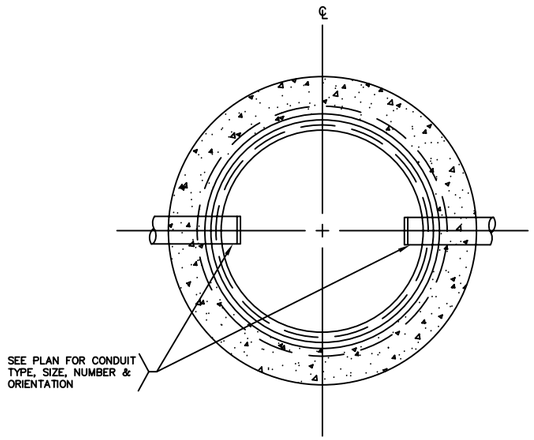

PLAN

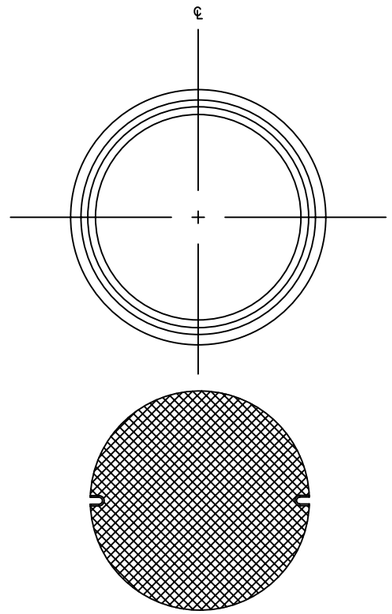

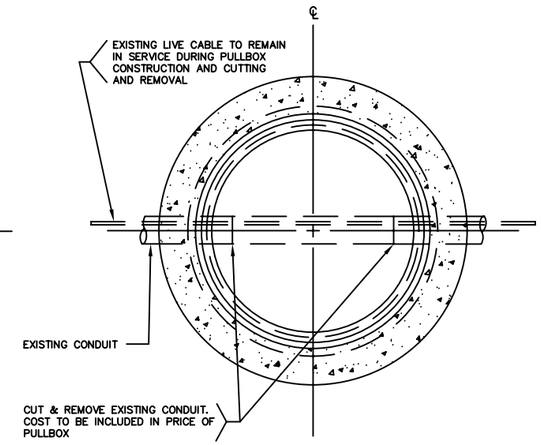

PLAN

NOTES:

1. PULLBOX FRAME AND LID SHALL BE NEENAH OR APPROVED EQUAL
   TYPE A PULLBOX: R–1792–FL, SOLID LID
   TYPE B PULLBOX: R–1792–DL, SOLID LID
   TYPE C PULLBOX: R–1788–D, SOLID LID
2. PULLBOX FRAME SHALL BE SET IN A BED OF MORTAR ATOP PULLBOX.
3. FORMS SHALL BE TUBULAR WITH 3/8 INCH WALL THICKNESS, SPIRALLY WOUND, LAMINATED FIBER AND CONCENTRICALLY PLACED. DIMENSIONS SHOWN ARE I.D. FORMS WILL REMAIN IN PLACE UPON COMPLETION OF CONSTRUCTION.
4. CONCRETE SHALL BE CLASS C MEETING STATE OF OHIO, DEPARTMENT OF TRANSPORTATION, CONSTRUCTION AND MATERIAL SPECIFICATIONS, ITEM 499. CONCRETE FOR PULLBOXES SHALL BE POURED IN PLACE.
5. POUROUS BACKFILL SHALL BE NO. 6 COARSE AGGREGATE MEETING STATE OF OHIO, DEPARTMENT OF TRANSPORTATION, CONSTRUCTION AND MATERIAL SPECIFICATIONS, ITEM 703.
6. WHEN PULLBOX IS INSTALLED IN PAVED AREAS, AN ADEQUATE AREA SHALL BE REMOVED BY SAW CUTTING OR BY REMOVAL BACK TO AN EXPANSION JOINT. PAVEMENT MATCHING THE SURROUNDING AREA SHALL BE PLACED FROM THE PULLBOX RIM DOWN TO THE BOTTOM OF EXISTING PAVEMENT.

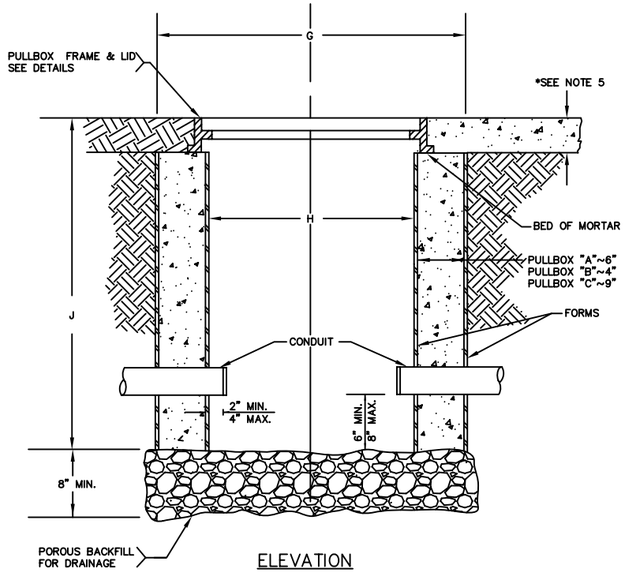

ELEVATION

CONCRETE PULLBOX

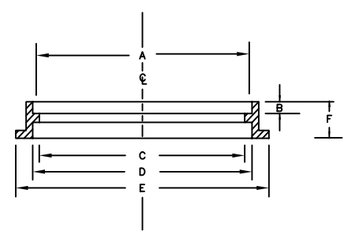

PULLBOX FRAME DETAIL

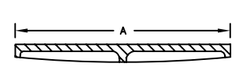

TYPE A & B PULLBOX LID DETAIL

TYPE C PULLBOX LID DETAIL

DIMENSION TABLE

PULLBOX TYPE	DIMENSIONS IN INCHES									TYPICALLY USED IN
	A	B	C	D	E	F	G	H	J	
A	25 1/4	1 1/2	23 1/2	25 1/2	29 1/2	4	36	24	36	WALK OR EARTH
B	18 1/4	1 1/2	16 1/2	18 1/2	22 1/2	4	24	16	24	WALK OR EARTH
C	23 5/8	3	21 1/8	24 5/8	34 3/4	7	42	24	36	PAVEMENT

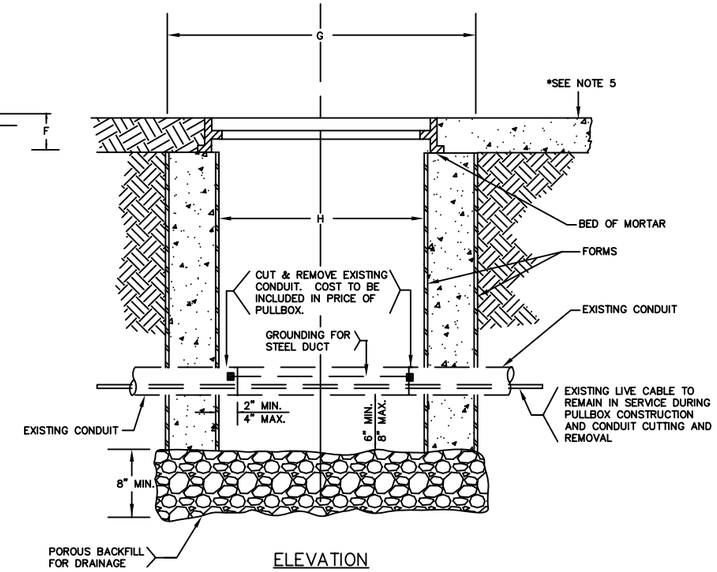

ELEVATION

CONCRETE PULLBOX

INSTALLED OVER EXISTING DUCT

03/05
04/17/07

PULL BOX WITH NEW OR EXISTING CONDUIT

LUCAS COUNTY STANDARD CONSTRUCTION DRAWINGS

TR–11

MATERIAL SPECIFICATIONS FOR GENERATOR / INVERTER POWER PANEL EQUIPMENT

GENERATOR INLET – THE INLET SHALL BE 30 AMP, 125/250V, LOCKING, FOUR (4) WIRE GROUNDING AND MEET THE NEMA CONFIGURATION NUMBER L14–30–P 30A 125/250V SPECIFICATION. THE INLET SHALL BE A HUBBELL CATALOG #2715.

HEAVY DUTY POWER RELAY – SHALL BE 30 AMP, 120 VAC, DPDT AN SHALL BE AN OMRON, MODEL (MGN2C–M). (THE MG SERIES DUST COVER IS REQUIRED) TO ORDER, CALL 1–800–556–6766

LINE VOLTAGE INDICATOR LIGHT – THE INDICATOR LIGHT SHALL BE A 120 V AC LIGHT EMITTING DIODE WITH A RED LENS.

LINE VOLTAGE CIRCUIT BREAKER – THE CIRCUIT BREAKER SHALL BE SINGLE POLE SINGLE THROW AND A MINIMUM OF 30 AMPS. THE AMPERAGE SHALL BE INCREASED TO ACCOMODATE GREATER LOADS, IF NECESSARY. THE GAUGE OF THE POWER CABLE SHALL BE OF PROPER SIZE PER THE N.E.C.

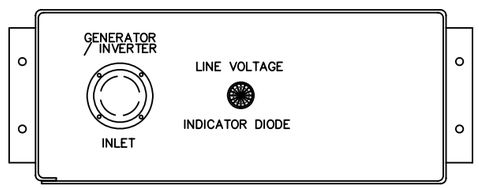

FRONT VIEW OF GENERATOR / INVERTER POWER PANEL

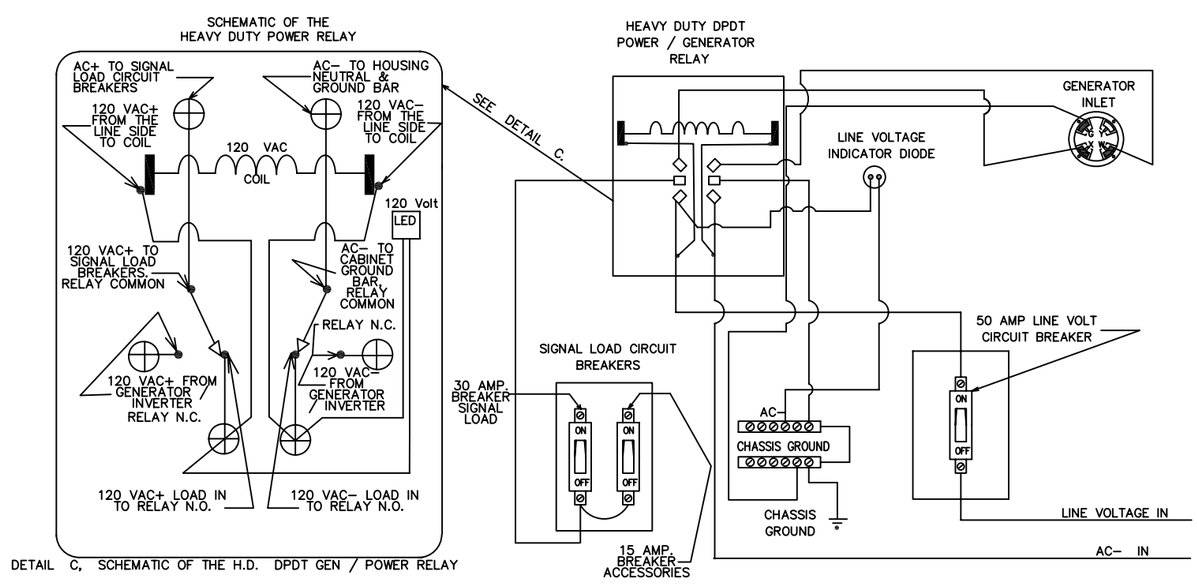

ELECTRICAL HOOKUP DETAIL FOR THE GENERATOR POWER PANEL

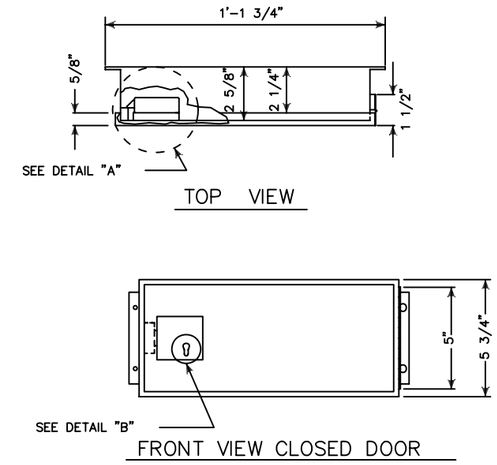

GENERATOR POWER PANEL ENCLOSURE

NOTES:

1. THE ENCLOSURE SHALL BE CONSTRUCTED OF 1/8" THICK ALUMINUM.
2. THE LOCK SHALL BE THE STANDARD POLICE DOOR TYPE, KEYED WITH THE STANDARD FLASHER DOOR SKELETON KEY.
3. THE DOOR SHALL BE SEALED WITH A FOAM RUBBER GASKET TO PREVENT MOISTURE FROM ENTERING THE ENCLOSURE.
4. THE ENCLOSURE SHALL BE MOUNTED ONTO THE OUTSIDE OF THE CONTROLLER CABINET WITH NON–ACCESSIBLE BOLTS AND SEALED WITH A HIGH QUALITY SILICON CAULK AT ALL SURFACES TOUCHING THE CABINET.
5. THE HINGE SHALL BE OF STAINLESS STEEL OR EQUIVALENT CORROSIVE–RESISTANT MATERIAL.

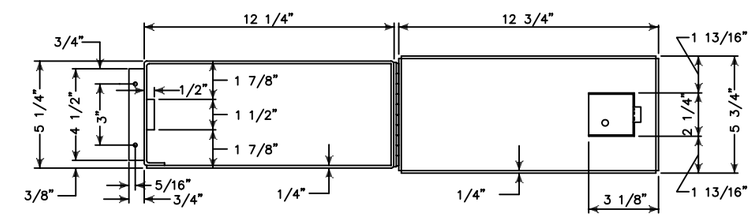

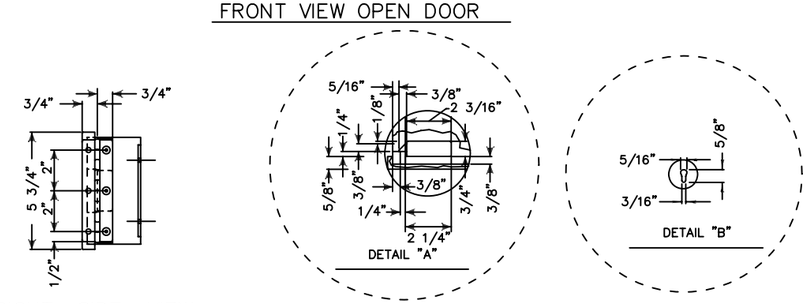

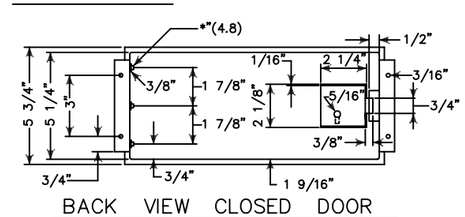

GENERATOR POWER PANEL

LUCAS COUNTY STANDARD CONSTRUCTION DRAWINGS

TR–12